YAMAHA

PARTS CATALOGUE

V125ZR (5XK9) MALAYSIA
V125ZR (5XKA) MALAYSIA

1N5XK-440E1

( )

YAMAHA
GENUINE
Parts & Accessories

V125ZR
PARTS CATALOGUE
©2013 by Yamaha Motor Co., Ltd.
1st edition, October 2013
All rights reserved.
Any reprinting or unauthorized use
without the written permission of
Yamaha Motor Co., Ltd.
is expressly prohibited.
Printed in Japan.

FOREWORD

This Parts Catalogue is related to the parts for the model(s) on the cover page. When you are ordering replacement parts, please refer to this Parts Catalogue and quote both part numbers and part names correctly.

1. Modifications or additions which have been made after the issue of the Parts Catalogue will be announced in the Parts News.
   It is advisable that you make the necessary corrections to the Parts Catalogue according to the Parts News.

2. Abbreviations
   The following abbreviations are used in this Parts Catalogue.

   “UR” Use specified parts number.
   “UN” Use as many as needed.
   “AP” Alternate Parts
   “LM” Locally Made (Parts need to be ordered locally)
   “F#” Frame No. (Applicable machine No.)
   “O/S” Over Size

3. The number of components for assembly
   - Parts, which are to be supplied in an assembly, are listed with a dot (.) in front of the part name as shown below.
   - The numeral appearing to the right of each component part indicates the quantity of parts for each assembly unit.

PART NO.	DESCRIPTION	Q’TY	REMARKS
2F5–83310–60	FRONT FLASHER LIGHT ASSY	2	
115–83311–60	.BULB (6V–18W)	1	

4. Applicable colours of graphics are represented in the “REMARKS” as shown below.

PART NO.	DESCRIPTION	Q’TY	REMARKS
2N4–24110–00–X5	FUEL TANK COMP.	2	MXR
3J1–24240–10	.GRAPHIC, FUEL TANK	1	FOR MXR

5. Note that the illustrations for reference in finding parts numbers are not to be used for assembling. When assembling, please use the applicable service manual.

6. The asterisk (*) before a reference number indicates modified items after the first edition.

7. Applicable Serial No.

Frame Serial No.

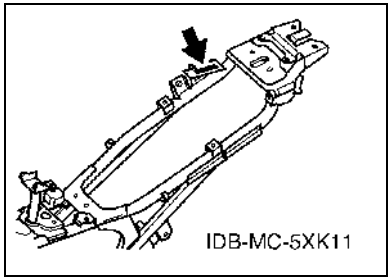

Engine Serial No.

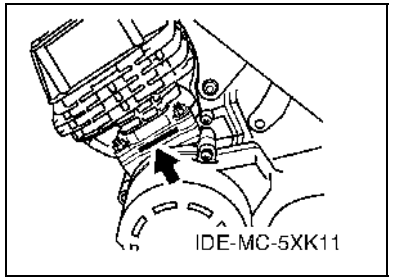

8. Applicable Colour Code (The (*) mark shows Model colour.)

Abbreviation	Colour Name	Colour Code
CIS	CIRCUIT SILVER	00WN
DPBMC(*)	DEEP PURPLISH BLUE METALLIC C	0564
DRMK(*)	DEEP RED METALLIC K	0918
MBL2	MAT BLACK 2	0582
SMX(*)	BLACK METALLIC X	0903
YB	YAMAHA BLACK	0033

9. Applicable Starting Serial No.

Frame Serial No.

Serial No.	Name Of Q'ty Column	Model Code

Engine Serial No.

Serial No.	Name Of Q'ty Column	Model Code

CONTENTS

ENGINE

CYLINDER 1
CRANKSHAFT & PISTON 2
OIL PUMP 4
INTAKE 5
CARBURETOR 6
EXHAUST 8
CRANKCASE 9
CRANKCASE COVER 1 10
STARTER 11
CLUTCH 12
TRANSMISSION 14
SHIFT CAM & FORK 16
SHIFT SHAFT 17

CHASSIS

FRAME 18
FENDER 19
SIDE COVER 20
OIL TANK 21
REAR ARM & SUSPENSION 22
STEERING 24
FRONT FORK 25
FUEL TANK 26
SEAT 27
FRONT WHEEL 28
FRONT BRAKE CALIPER 29
REAR WHEEL 30
REAR BRAKE CALIPER 32
STEERING HANDLE & CABLE 33
FRONT MASTER CYLINDER 35
STAND & FOOTREST 36
REAR MASTER CYLINDER 38
COWLING 1 39
GENERATOR 42
FLASHER LIGHT 43
METER 44
HEADLIGHT 45
TAILLIGHT 46
HANDLE SWITCH & LEVER 47
ELECTRICAL 1 48
ELECTRICAL 2 49

INDEX

NUMERICAL INDEX 50

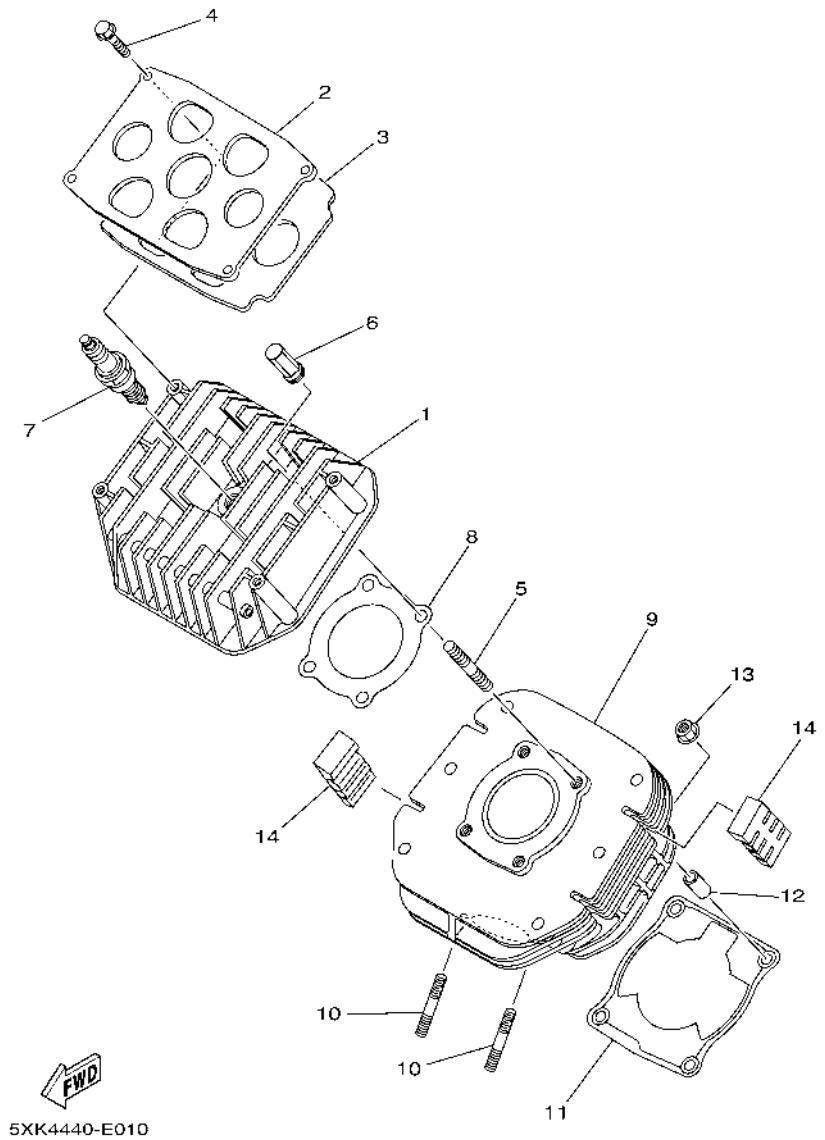

FIG. 1 CYLINDER

REF. NO.	PART NO.	DESCRIPTION	5XK9	5XKA				REMARKS
1	5BU–E1111–00	HEAD, CYLINDER 1	1	1				
2	5BU–E1191–00	COVER, CYLINDER HEAD 1	1	1				
3	5BU–E1161–00	ABSORBER 1	1	1				
4	95027–06014	BOLT, FLANGE	4	4				
5	90116–08393	BOLT, STUD	4	4				
6	90176–08061	NUT, CROWN	4	4				
7	94702–00811	PLUG, SPARK (NGK B8ES)	1	1				
8	5XK–E1181–00	GASKET, CYLINDER HEAD 1	1	1				
9	5BU–E1311–00	CYLINDER 1	1	1				
10	95617–08620	BOLT, STUD	2	2				
11	5BU–E1351–00	GASKET, CYLINDER	1	1				
12	99530–10114	PIN, DOWEL	2	2				
13	90179–08299	NUT	4	4				
14	5BU–E1162–00	ABSORBER 2	4	4				

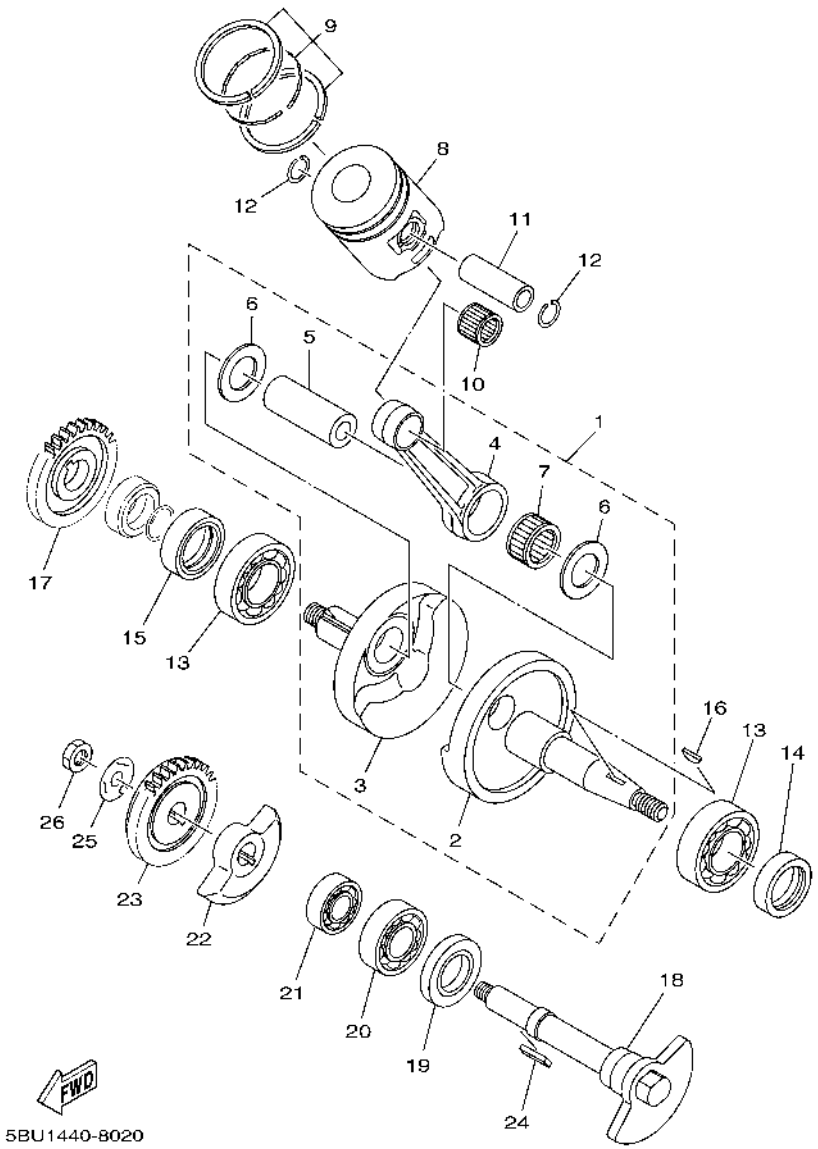

FIG. 2 CRANKSHAFT & PISTON

REF. NO.	PART NO.	DESCRIPTION	5XK9	5XKA				REMARKS
1	5BU–E1400–02	CRANKSHAFT ASSY	1	1				
2	5BU–E1412–02	.CRANK 1	1	1				
3	5BU–E1422–02	.CRANK 2	1	1				
4	34X–11651–00	.ROD, CONNECTING	1	1				
5	55K–11681–00	.PIN, CRANK 1	1	1				
6	90209–22292	.WASHER	2	2				
7	93310–422X4	.BEARING	1	1				
8	5BU–11631–00–A0	PISTON (STD)	1	1				
	5BU–11635–00	PISTON (0.25MM O/S)	1	1				AP
	5BU–11636–00	PISTON (0.50MM O/S)	1	1				AP
9	5BU–11603–00	PISTON RING SET (STD)	1	1				
	5BU–11604–00	PISTON RING SET (0.25MM O/S)	1	1				AP
	5BU–11605–00	PISTON RING SET (0.50MM O/S)	1	1				AP
10	93310–216X9	BEARING	1	1				
11	280–11633–00	PIN, PISTON	1	1				
12	93450–17044	CIRCLIP	2	2				
13	93306–205XK	BEARING	2	2				
14	93103–25098	OIL SEAL	1	1				
15	93103–32099	OIL SEAL	1	1				
16	90280–03017	KEY, WOODRUFF	1	1				
17	4XC–11536–01	GEAR, DRIVE	1	1				
18	5BU–11454–00	WEIGHT 1	1	1				
19	93102–25446	OIL SEAL	1	1				
20	93306–004XP	BEARING	1	1				
21	93306–252Y9	BEARING	1	1				
22	5BU–E1464–00	WEIGHT 2	1	1				
23	4XC–11530–01	BALANCER WEIGHT GEAR COMP.	1	1				

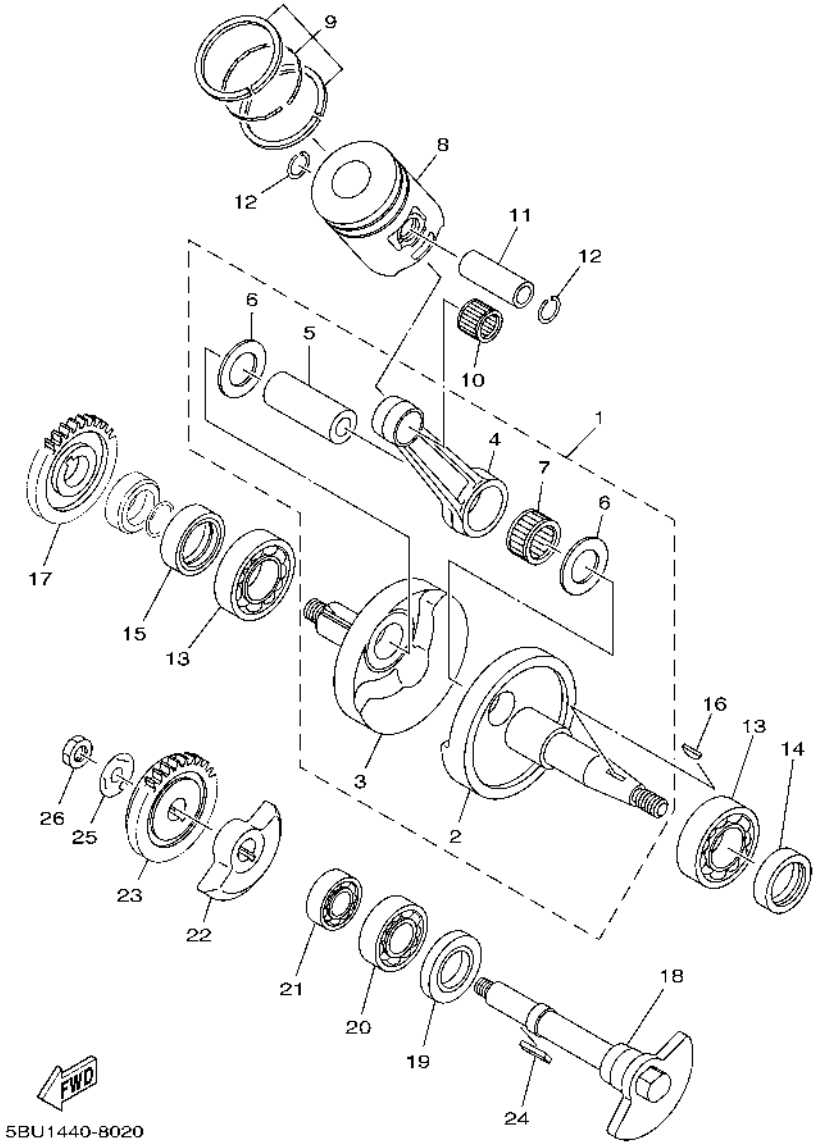

FIG. 2 CRANKSHAFT & PISTON

REF. NO.	PART NO.	DESCRIPTION	5XK9	5XKA				REMARKS
24	90282–05047	KEY, STRAIGHT	1	1				
25	90215–10284	WASHER, LOCK	1	1				
26	90170–10405	NUT	1	1				

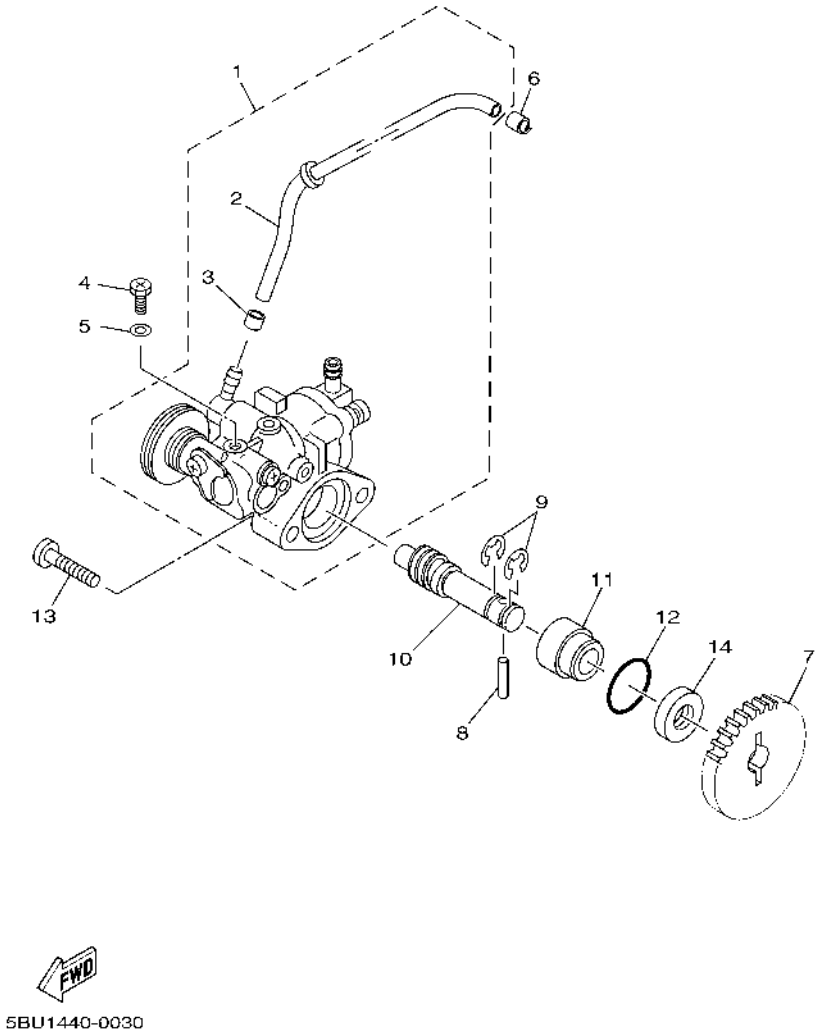

FIG. 3 OIL PUMP

REF. NO.	PART NO.	DESCRIPTION	5XK9	5XKA				REMARKS
1	5BU–13104–02	OIL PUMP SUB ASSY	1	1				
2	5BU–13161–00	.PIPE, DELIVERY 1	1	1				
3	90468–02033	.CLIP	1	1				
4	90149–04318	SCREW	1	1				
5	90430–04229	GASKET	1	1				
6	90468–02033	CLIP	1	1				
7	10V–13178–01	GEAR, PUMP DRIVE	1	1				
8	93603–22028	PIN, DOWEL	1	1				
9	93430–08007	CIRCLIP	2	2				
10	4FL–13175–00	SHAFT, WORM	1	1				
11	5BU–E3176–00	METAL, WORM SHAFT OUTER	1	1				
12	93210–18397	O-RING	1	1				
13	98507–05014	SCREW, PAN HEAD	2	2				
14	93101–10001	OIL SEAL	1	1				

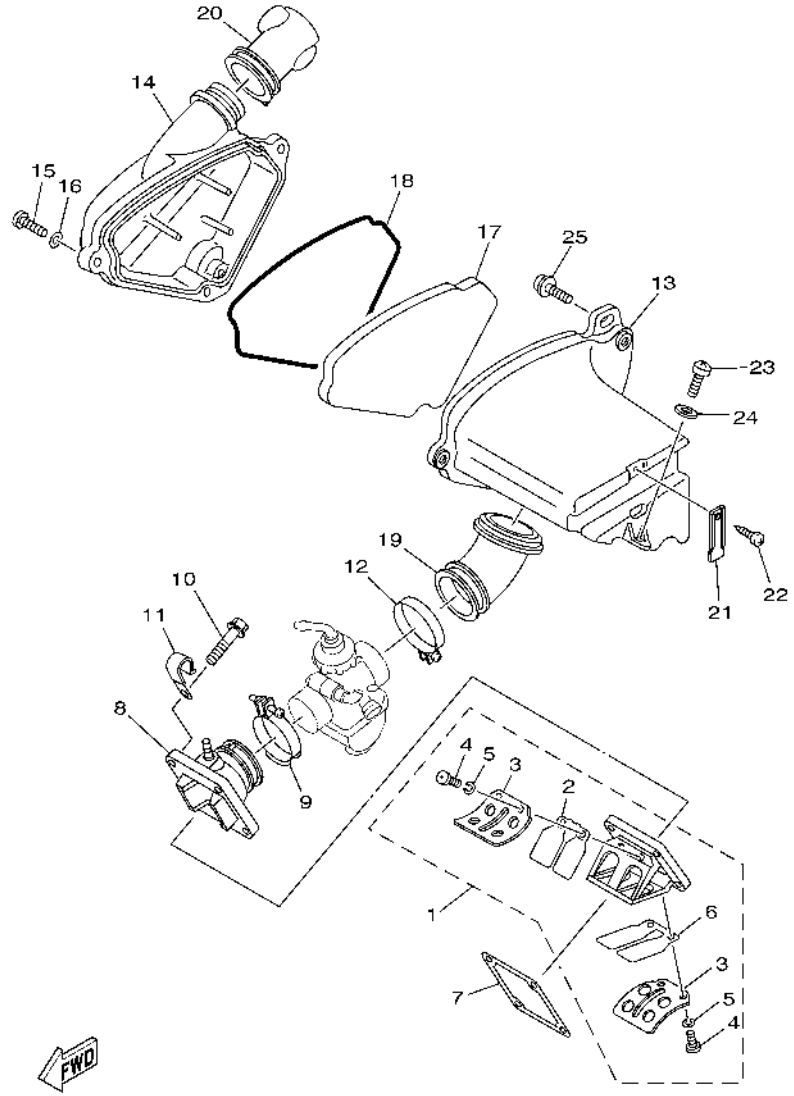

5BU1440-0040

FIG. 4 INTAKE

REF. NO.	PART NO.	DESCRIPTION	5XK9	5XKA				REMARKS
1	3BS–13610–00	REED VALVE ASSY	1	1				
2	3BS–13613–00	.REED, VALVE	1	1				
3	10V–13616–01	.STOPPER, REED VALVE	2	2				
4	98507–03008	.SCREW, PAN HEAD	4	4				
5	92907–03100	.WASHER, SPRING	4	4				
6	3BS–13613–10	.REED, VALVE	1	1				
7	5BU–E3621–00	GASKET, VALVE SEAT	1	1				
8	5BU–13565–00	JOINT, CARBURETOR	1	1				
9	90450–44046	HOSE CLAMP ASSY	1	1				
10	95807–06025	BOLT, FLANGE	4	4				
11	90465–08028	CLAMP	1	1				
12	90460–49058	CLAMP, HOSE	1	1				
13	5BU–E4411–00	CASE, AIR CLEANER 1	1	1				
14	5BU–E4412–00	CAP, CLEANER CASE 1	1	1				
15	98507–06025	SCREW, PAN HEAD	3	3				
16	92907–06600	WASHER, PLATE	3	3				
17	5BU–E4451–00	ELEMENT, AIR CLEANER	1	1				
18	5BU–E4476–00	SEAL	1	1				
19	5BU–E4453–00	JOINT, AIR CLEANER 1	1	1				
20	5BU–E4437–00	DUCT	1	1				
21	5BU–E5485–00	CLAMP	1	1				
22	97707–50512	SCREW, TAPPING	1	1				
23	98507–06016	SCREW, PAN HEAD	1	1				
24	92907–06600	WASHER, PLATE	1	1				
25	90159–06033	SCREW, WITH WASHER	1	1				

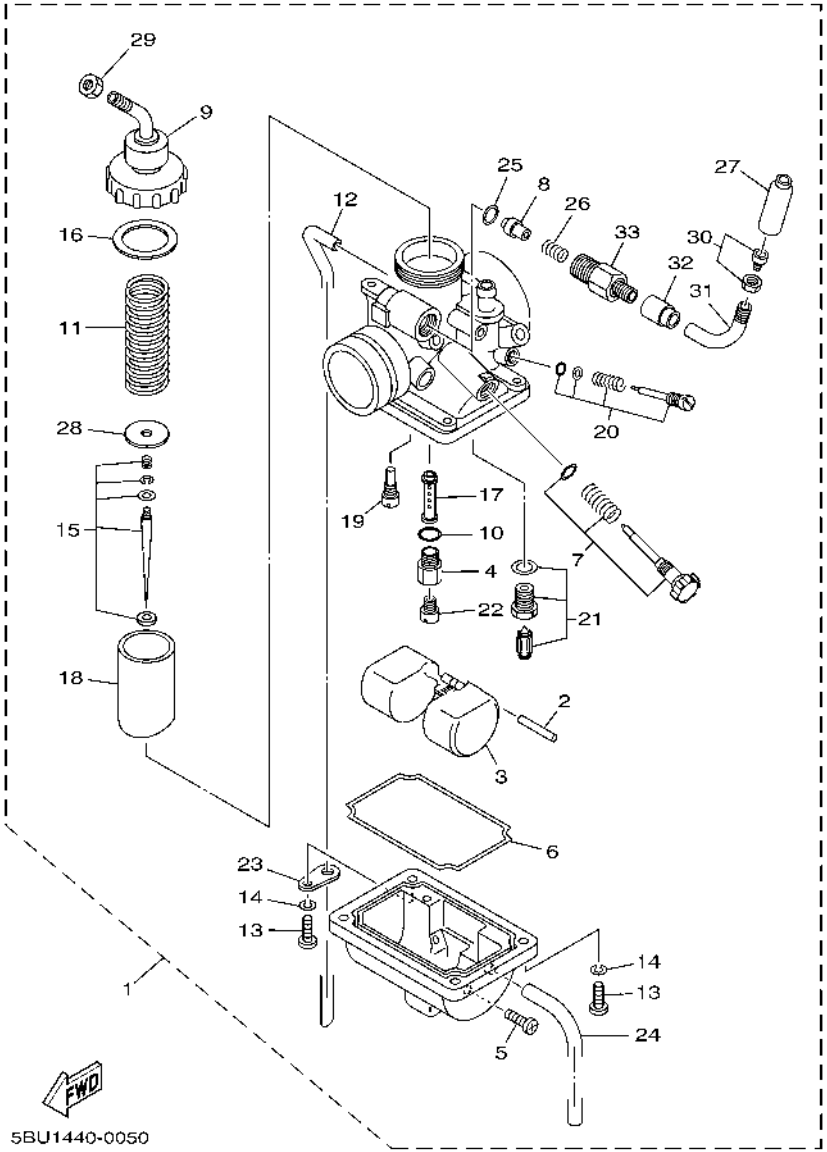

FIG. 5 CARBURETOR

REF. NO.	PART NO.	DESCRIPTION	5XK9	5XKA				REMARKS
1	5BU–E4101–00	CARBURETOR ASSY 1	1	1				
2	537–14186–00	.PIN, FLOAT	1	1				
3	304–14185–00	.FLOAT	1	1				
4	2N4–14145–00	.HOLDER	1	1				
5	12R–14191–00	.PLUG, DRAIN	1	1				
6	304–14184–00	.GASKET, FLOAT CHAMBER	1	1				
7	4AC–14103–00	.THROTTLE SCREW SET	1	1				
8	3XV–14171–00	.PLUNGER, STARTER	1	1				
9	1M1–14169–00	.CAP	1	1				
10	214–14147–00	.O-RING	1	1				
11	5BU–14131–00	.SPRING, THROTTLE VALVE	1	1				
12	4AC–14197–00	.PIPE	1	1				
13	98507–04016	.SCREW, PAN HEAD	4	4				
14	92907–04100	.WASHER, SPRING	4	4				
15	5BU–1490J–00	.NEEDLE SET	1	1				
16	5BU–14126–00	.GASKET	1	1				
17	5BU–14141–32	.NOZZLE, MAIN	1	1				
18	5BU–14112–20	.VALVE, THROTTLE 1	1	1				
19	193–14142–15	.JET, PILOT (# 15)	1	1				
20	3MB–14104–00	.AIR SCREW SET	1	1				
21	21W–14107–20	.NEEDLE VALVE SET	1	1				
22	137–14143–20	.JET, MAIN (#100)	1	1				
23	132–14146–00	.PLATE	1	1				
24	10V–14196–00	.PIPE, OVER FLOW 1	1	1				
25	878–14147–00	.O-RING	1	1				
26	509–14135–00	.COIL, SPRING	1	1				
27	3YR–14169–00	.CAP	1	1				

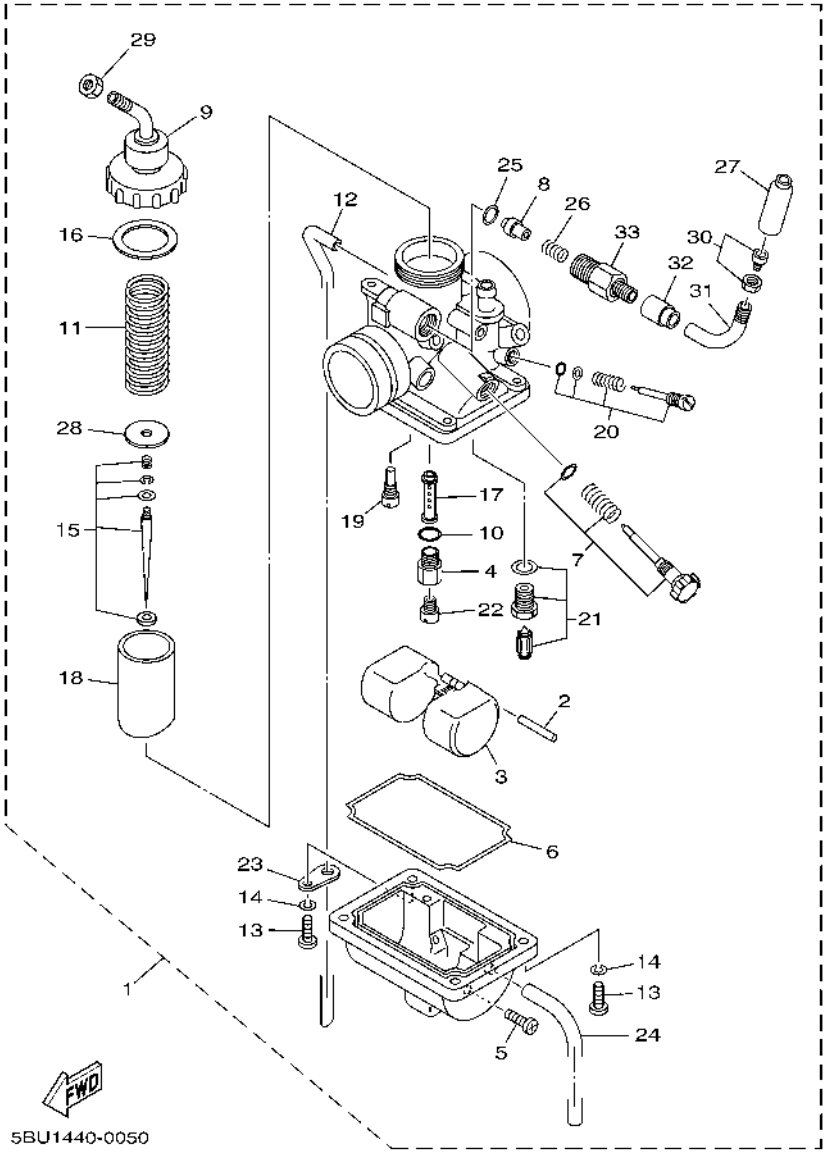

FIG. 5 CARBURETOR

REF. NO.	PART NO.	DESCRIPTION	5XK9	5XKA				REMARKS
28	5BU–14146–00	.PLATE	1	1				
29	127–14161–00	.NUT, CABLE ADJUSTING	1	1				
30	17L–14106–00	.CABLE ADJUST SCREW SET	1	1				
31	4AC–14155–00	.GUIDE, CABLE	1	1				
32	5U8–14169–00	.CAP	1	1				
33	1R0–14174–00	.CAP, PLUNGER	1	1				

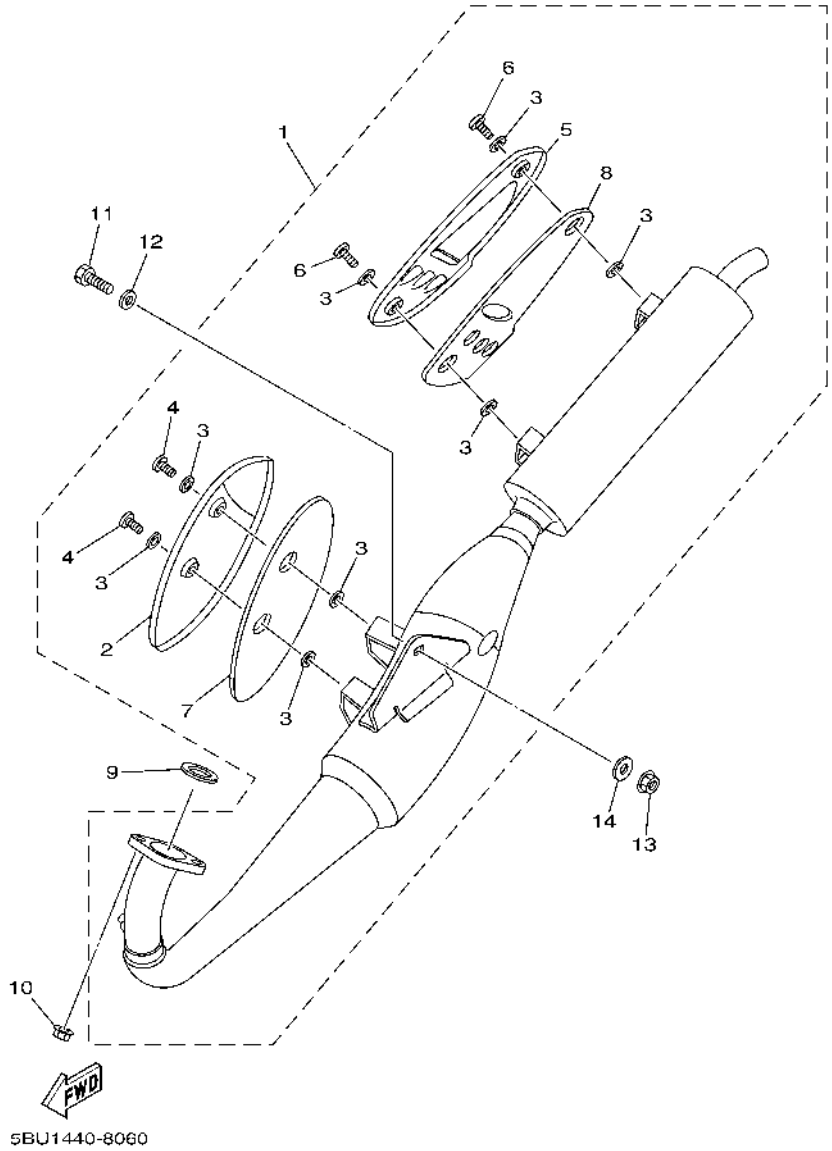

FIG. 6 EXHAUST

REF. NO.	PART NO.	DESCRIPTION	5XK9	5XKA				REMARKS
1	5XK–E4710–00	MUFFLER ASSY 1	1	1				
2	5BU–E4718–00	.PROTECTOR, MUFFLER 1	1	1				
3	90202–05187	.WASHER, PLATE	8	8				
4	98980–06008	.SCREW, BIND	2	2				
5	5XK–E4758–00	.PROTECTOR, SILENCER	1	1				
6	98907–06008	.SCREW, BIND	2	2				
7	5BU–E4728–00	.PROTECTOR, MUFFLER 2	1	1				
8	5BU–E4738–00	.PROTECTOR, MUFFLER 3	1	1				
9	3NA–14613–01	GASKET, EXHAUST PIPE	1	1				
10	95707–08500	NUT, FLANGE	2	2				
11	97007–08020	BOLT	1	1				
12	92907–08200	WASHER	1	1				
13	95707–08500	NUT, FLANGE	1	1				
14	90201–083A8	WASHER, PLATE	1	1				

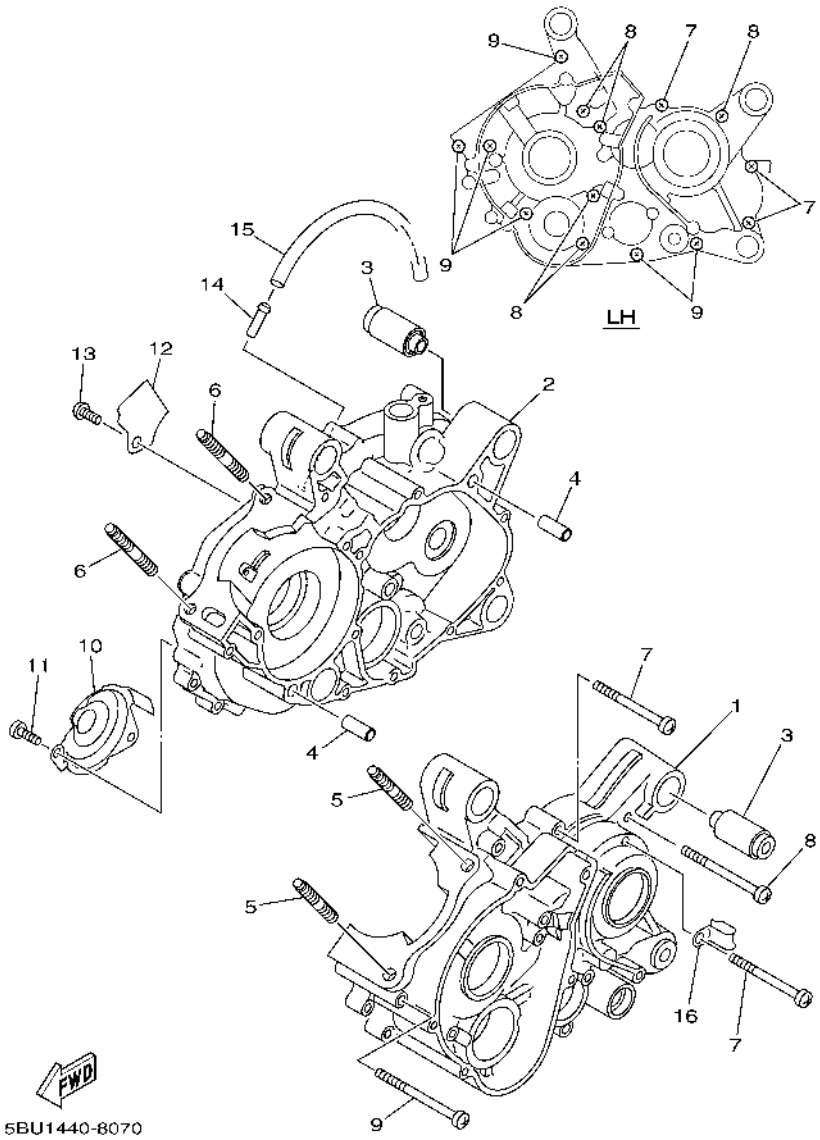

FIG. 7 CRANKCASE

REF. NO.	PART NO.	DESCRIPTION	5XK9	5XKA				REMARKS
1	5BU–E5111–00	CRANKCASE 1	1	1				
2	5BU–E5121–00	CRANKCASE 2	1	1				
3	5BU–E5316–00	DAMPER 1	4	4				
4	99530–10114	PIN, DOWEL	2	2				
5	90116–08388	BOLT, STUD	2	2				
6	90116–08318	BOLT, STUD	2	2				
7	98507–06035	SCREW, PAN HEAD	3	3				
8	98507–06060	SCREW, PAN HEAD	5	5				
9	98507–06070	SCREW, PAN HEAD	6	6				
10	5BU–E5492–00	COVER	1	1				
11	98507–06012	SCREW, PAN HEAD	2	2				
12	5BU–E5113–00	PLATE	1	1				
13	98507–08010	SCREW, PAN HEAD	1	1				
14	5BU–E3115–00	CONNECTOR, SUCTION PIPE	1	1				
15	90445–08808	HOSE	1	1				
16	5BU–E5484–00	CLAMP 2	1	1				

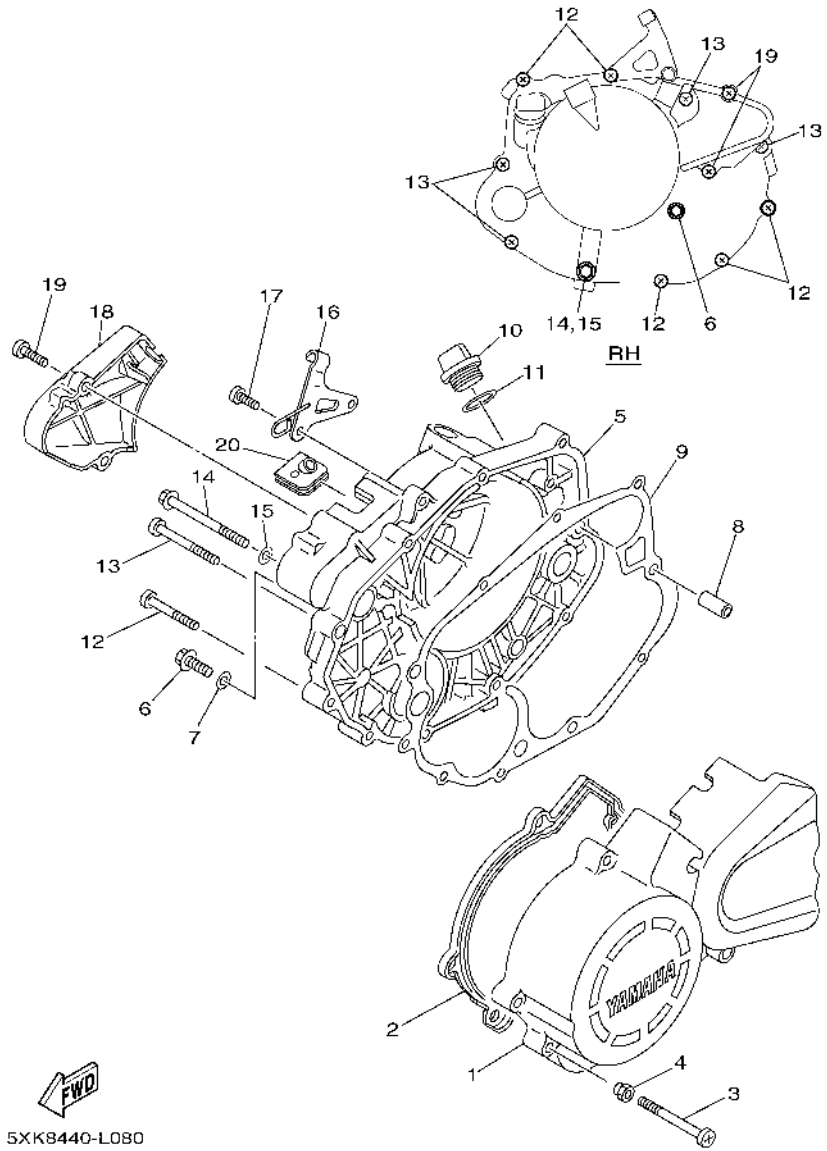

FIG. 8 CRANKCASE COVER 1

REF. NO.	PART NO.	DESCRIPTION	5XK9	5XKA				REMARKS
1	5XK–E5411–00	COVER, CRANKCASE 1	1	1				
2	5BU–E5379–00	SEAL, CRANKCASE	1	1				
3	90157–06096	SCREW, PAN HEAD	1	1				
4	90480–09481	GROMMET	1	1				
5	5XK–E5421–00	COVER, CRANKCASE 2	1	1				
6	95807–06016	BOLT, FLANGE	1	1				
7	90430–06166	GASKET	1	1				
8	99530–10114	PIN, DOWEL	2	2				
9	5BU–E5461–00	GASKET, CRANKCASE COVER 2	1	1				
10	3Y1–15363–10	PLUG, OIL	1	1				
11	93210–19123	O-RING	1	1				
12	98507–06030	SCREW, PAN HEAD	5	5				
13	98507–06040	SCREW, PAN HEAD	4	4				
14	95807–08080	BOLT, FLANGE	1	1				
15	90430–08119	GASKET	1	1				
16	5BU–E5441–00	HOLDER, CLUTCH CABLE	1	1				
17	98507–06014	SCREW, PAN HEAD	1	1				
18	5XK–E5416–00	COVER, OIL PUMP	1	1				
19	98507–06020	SCREW, PAN HEAD	2	2				
20	5BU–E3174–00	HOLDER, OIL PIPE	1	1				

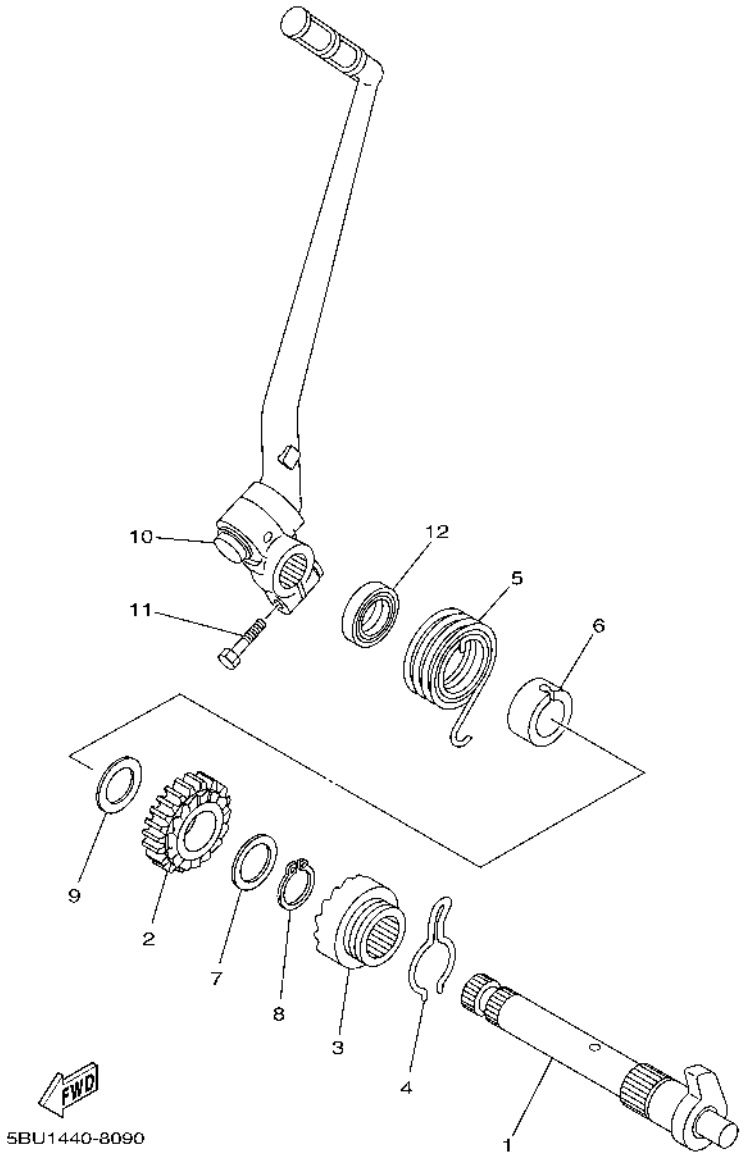

FIG. 9 STARTER

REF. NO.	PART NO.	DESCRIPTION	5XK9	5XKA				REMARKS
1	5BU–15660–00	KICK AXLE ASSY	1	1				
2	5BU–15641–00	GEAR, KICK	1	1				
3	5BU–15671–00	WHEEL, RATCHET	1	1				
4	90468–26046	CLIP	1	1				
5	90508–26700	SPRING, TORSION	1	1				
6	5BU–15666–00	SPACER	1	1				
7	90201–203F5	WASHER, PLATE	1	1				
8	93410–20038	CIRCLIP	1	1				
9	90201–17713	WASHER, PLATE	1	1				
10	5BU–E5620–00	KICK CRANK ASSY	1	1				
11	97027–08030	BOLT, HEXAGON	1	1				
12	93102–17004	OIL SEAL	1	1				

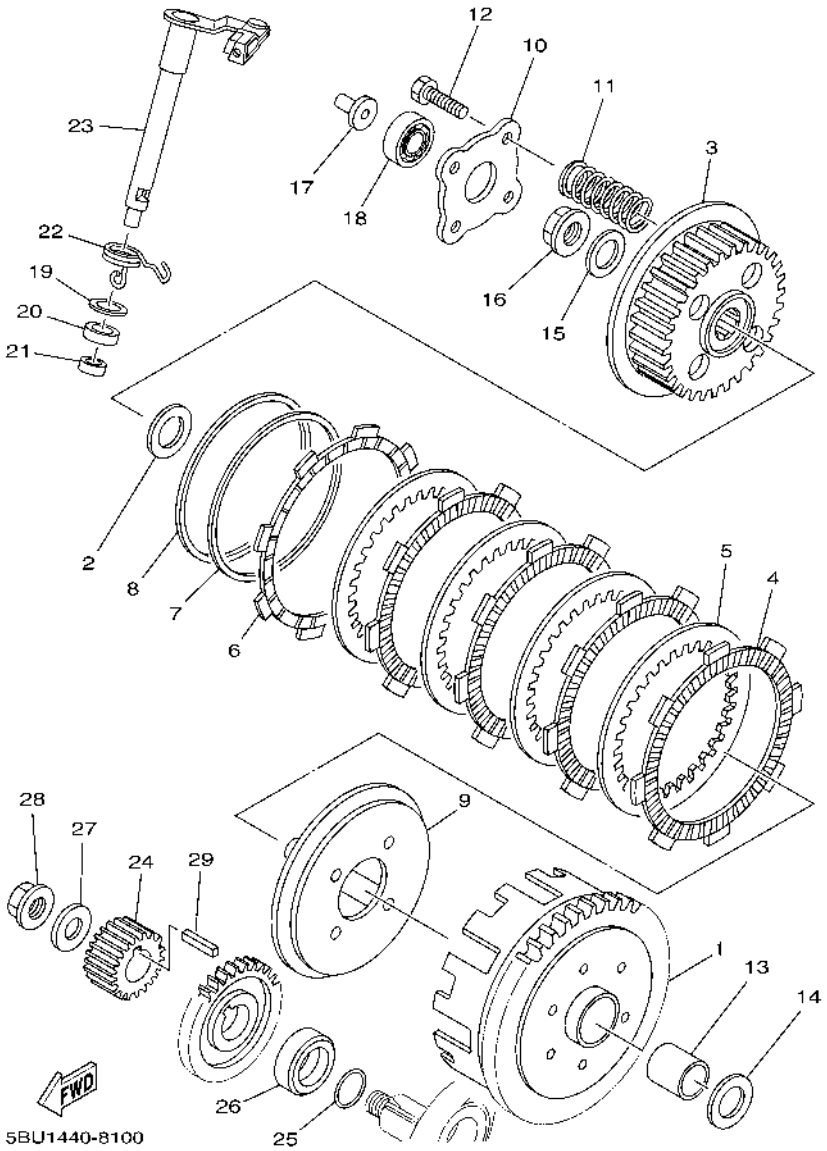

FIG. 10 CLUTCH

REF. NO.	PART NO.	DESCRIPTION	5XK9	5XKA				REMARKS
1	5BU–E6150–00	PRIMARY DRIVEN GEAR COMP.	1	1				
2	90201–172U8	WASHER, PLATE	1	1				
3	4TT–E6371–00	BOSS, CLUTCH	1	1				
4	5BU–16321–10	PLATE, FRICTION	4	4				
5	5XK–E6324–00	PLATE, CLUTCH 1	4	4				
6	5BU–16331–00	PLATE, FRICTION 2	1	1				
7	5BU–16383–00	SPRING.,CUSHION	1	1				
8	5BU–E6384–00	PLATE, SEAT	1	1				
9	5BU–E6351–00	PLATE, PRESSURE 1	1	1				
10	5BU–E6352–00	PLATE, PRESSURE 2	1	1				
11	90501–254L6	SPRING, COMPRESSION	4	4				
12	90101–06288	BOLT	4	4				
13	5BU–E6116–00	COLLAR 1	1	1				
14	90201–172U8	WASHER, PLATE	1	1				
15	90208–12015	WASHER, CONICAL SPRING	1	1				
16	90179–12659	NUT	1	1				
17	4TT–16356–00	ROD, PUSH 1	1	1				
18	93306–001X4	BEARING	1	1				
19	90201–12163	WASHER, PLATE	1	1				
20	93102–12224	OIL SEAL	1	1				
21	93315–108Y7	BEARING	1	1				
22	90508–14709	SPRING, TORSION	1	1				
23	5BU–E6380–10	PUSH LEVER ASSY	1	1				
24	2JK–16111–01	GEAR, PRIMARY DRIVE (22T)	1	1				
25	93210–18023	O-RING	1	1				
26	90387–208J9	COLLAR	1	1				
27	90201–120E8	WASHER, PLATE	1	1				

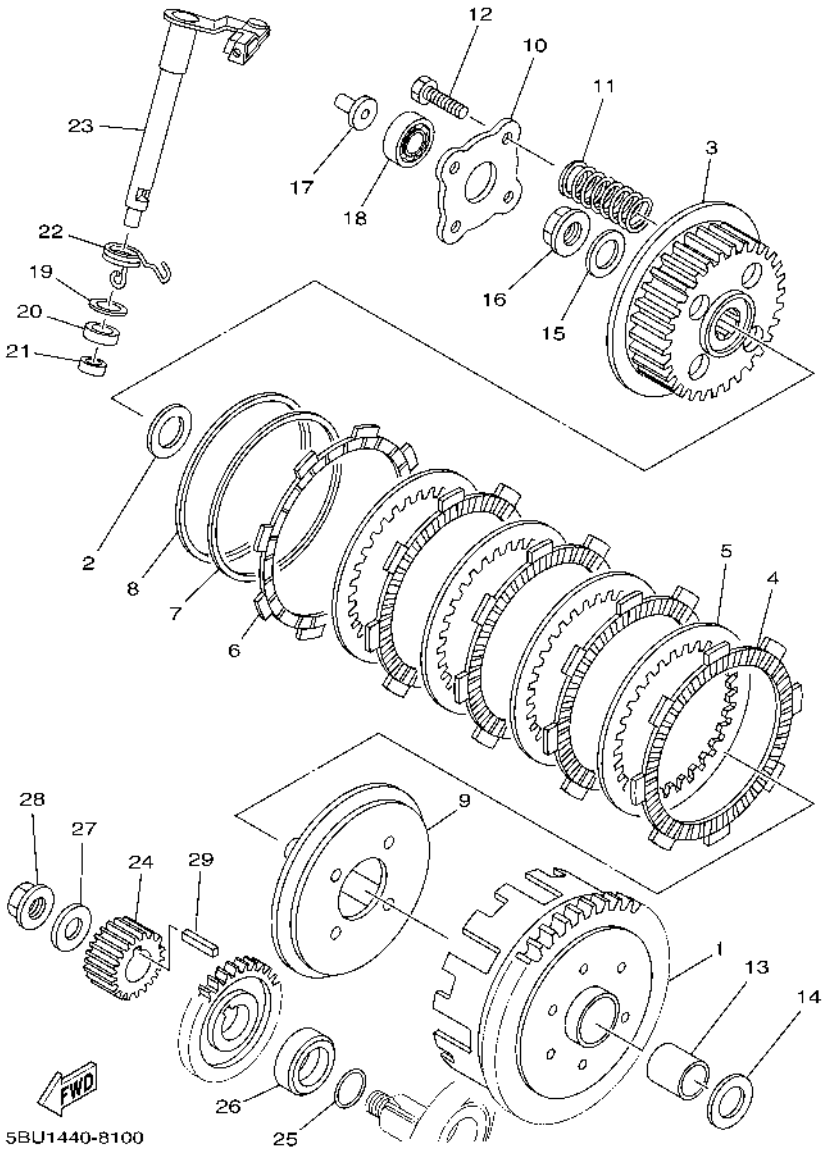

FIG. 10 CLUTCH

REF. NO.	PART NO.	DESCRIPTION	5XK9	5XKA				REMARKS
28	90179–12659	NUT	1	1				
29	90282–05047	KEY, STRAIGHT	1	1				

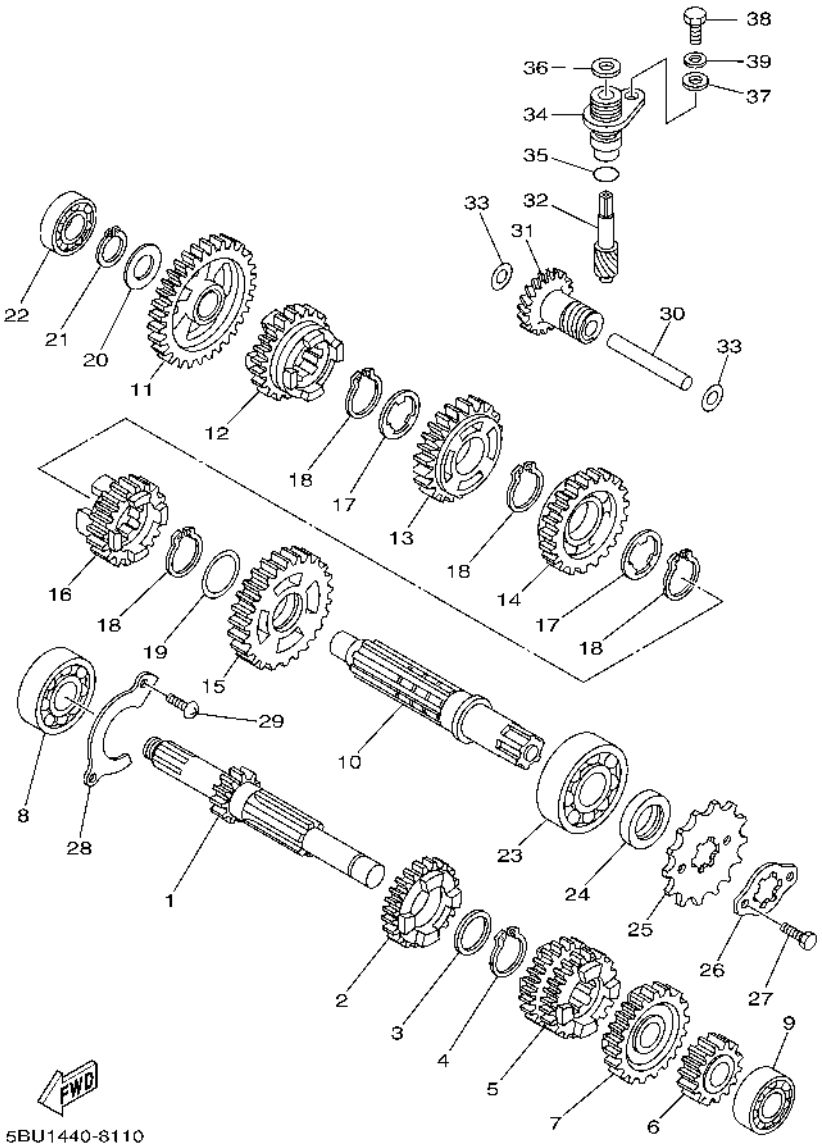

FIG. 11 TRANSMISSION

REF. NO.	PART NO.	DESCRIPTION	5XK9	5XKA				REMARKS
1	5BU–17411–00	AXLE, MAIN (12T)	1	1				
2	10W–17151–02	GEAR, 5TH PINION (23T)	1	1				
3	90201–20266	WASHER, PLATE (T=1.0)	1	1				
4	93410–20038	CIRCLIP	1	1				
5	10W–17131–01	GEAR, 3RD/4TH PINION (19T/21T)	1	1				
6	55K–17121–00	GEAR, 2ND PINION (16T)	1	1				
7	3SB–17161–00	GEAR, 6TH PINION (24T)	1	1				
8	93306–303X9	BEARING	1	1				
9	93306–252X0	BEARING	1	1				
10	5BU–17421–00	AXLE, DRIVE	1	1				
11	10W–17211–00	GEAR, 1ST WHEEL (34T)	1	1				
12	10W–17251–01	GEAR, 5TH WHEEL (23T)	1	1				
13	10W–17231–00	GEAR, 3RD WHEEL (26T)	1	1				
14	3SB–17241–00	GEAR, 4TH WHEEL (24T)	1	1				
15	10W–17221–00	GEAR, 2ND WHEEL (29T)	1	1				
16	5BU–17261–00	GEAR, 6TH WHEEL (21T)	1	1				
17	90209–18135	WASHER	2	2				
18	93410–22039	CIRCLIP	4	4				
19	90201–22555	WASHER, PLATE	1	1				
20	90201–15700	WASHER, PLATE	1	1				
21	99009–15400	CIRCLIP	1	1				
22	93306–252X0	BEARING	1	1				
23	93306–304YJ	BEARING	1	1				
24	93102–20143	OIL SEAL	1	1				
25	93822–15070	SPROCKET,DRIVE 15T(5H01746150)	1	1				
26	5BU–E7456–00	HOLDER, SPROCKET	1	1				
27	97027–06010	BOLT, HEXAGON	2	2				

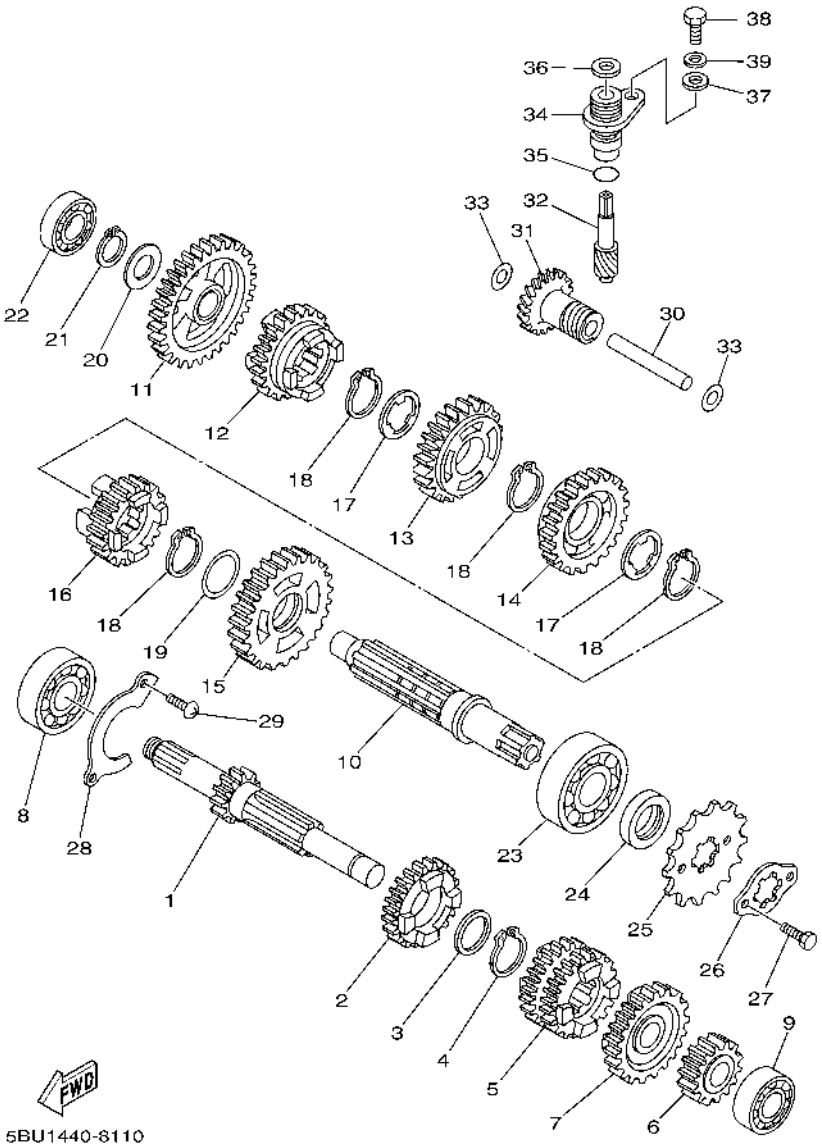

FIG. 11 TRANSMISSION

REF. NO.	PART NO.	DESCRIPTION	5XK9	5XKA				REMARKS
28	5BU–E7471–00	PLATE, COVER	1	1				
29	98507–05012	SCREW, PAN HEAD	2	2				
30	5BU–E7861–00	AXLE, DRIVE GEAR	1	1				
31	17F–17831–00	GEAR, DRIVE	1	1				
32	17F–17841–00	GEAR, DRIVEN	1	1				
33	90201–087H6	WASHER, PLATE	2	2				
34	4L0–17811–00	HOUSING, TACHOMETER GEAR	1	1				
35	93210–12327	O-RING	1	1				
36	4L0–17818–00	GASKET	1	1				
37	90201–06674	WASHER, PLATE	1	1				
38	97007–06012	BOLT	1	1				
39	92907–06600	WASHER, PLATE	1	1				

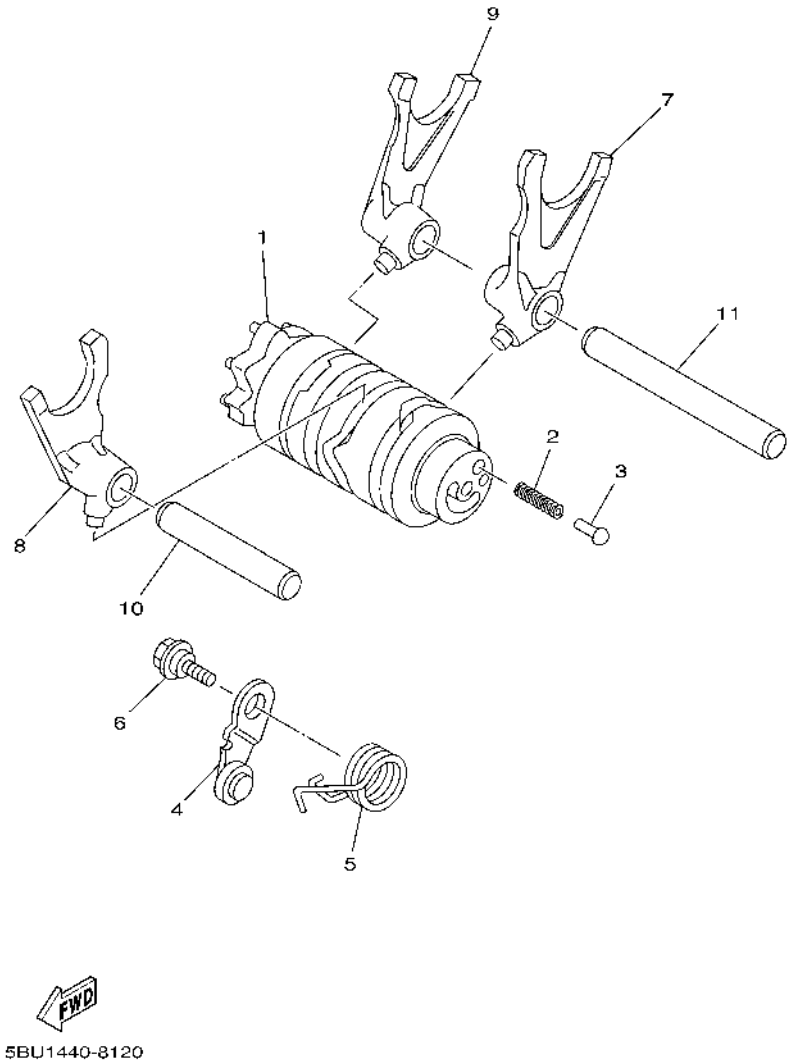

FIG. 12 SHIFT CAM & FORK

REF. NO.	PART NO.	DESCRIPTION	5XK9	5XKA				REMARKS
1	5BU–18540–00	SHIFT CAM ASSY	1	1				
2	90501–06022	SPRING, COMPRESSION	1	1				
3	4TT–E8542–00	POINT, NEUTRAL	1	1				
4	5BU–E8140–00	STOPPER LEVER ASSY	1	1				
5	5BU–E8144–00	HANGER, SPRING	1	1				
6	90109–063F8	BOLT	1	1				
7	4TT–E8511–00	FORK, SHIFT 1	1	1				
8	4TT–E8512–00	FORK, SHIFT 2	1	1				
9	4TT–E8513–00	FORK, SHIFT 3	1	1				
10	55K–E8531–00	BAR, SHIFT FORK GUIDE 1	1	1				
11	5BU–18535–00	BAR, SHIFT FORK GUIDE 2	1	1				

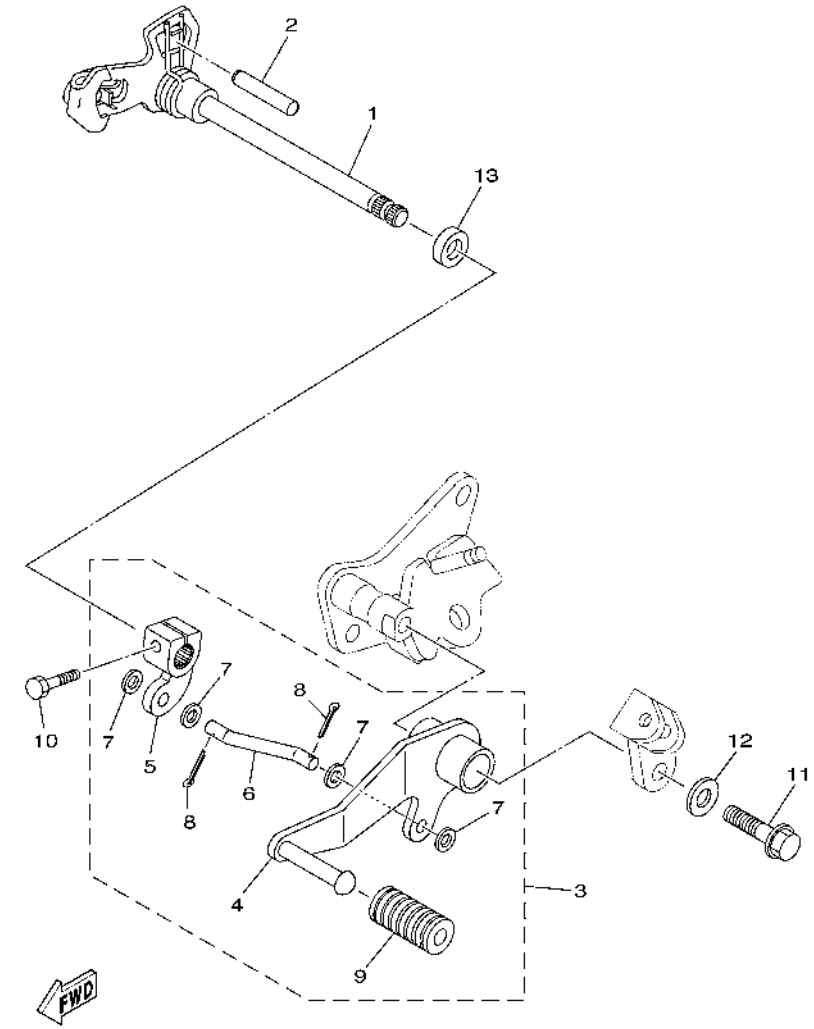

5XK1440-B130

FIG. 13 SHIFT SHAFT

REF. NO.	PART NO.	DESCRIPTION	5XK9	5XKA				REMARKS
1	5BU–18101–10	SHIFT SHAFT ASSY	1	1				
2	93608–43238	PIN, DOWEL	1	1				
3	5XK–E8110–00	SHIFT PEDAL ASSY	1	1				
4	5XK–E8111–00	.PEDAL, SHIFT	1	1				
5	5XK–E8112–00	.ARM, SHIFT	1	1				
6	5XK–E8115–00	.ROD, SHIFT	1	1				
7	92907–06200	.WASHER	4	4				
8	91401–20012	.PIN, COTTER	2	2				
9	5H3–E8113–00	.COVER, SHIFT PEDAL	1	1				
10	97027–06020	BOLT, HEXAGON	1	1				
11	95817–10040	BOLT, FLANGE	1	1				
12	90201–101J1	WASHER, PLATE	1	1				
13	93101–12173	OIL SEAL	1	1				

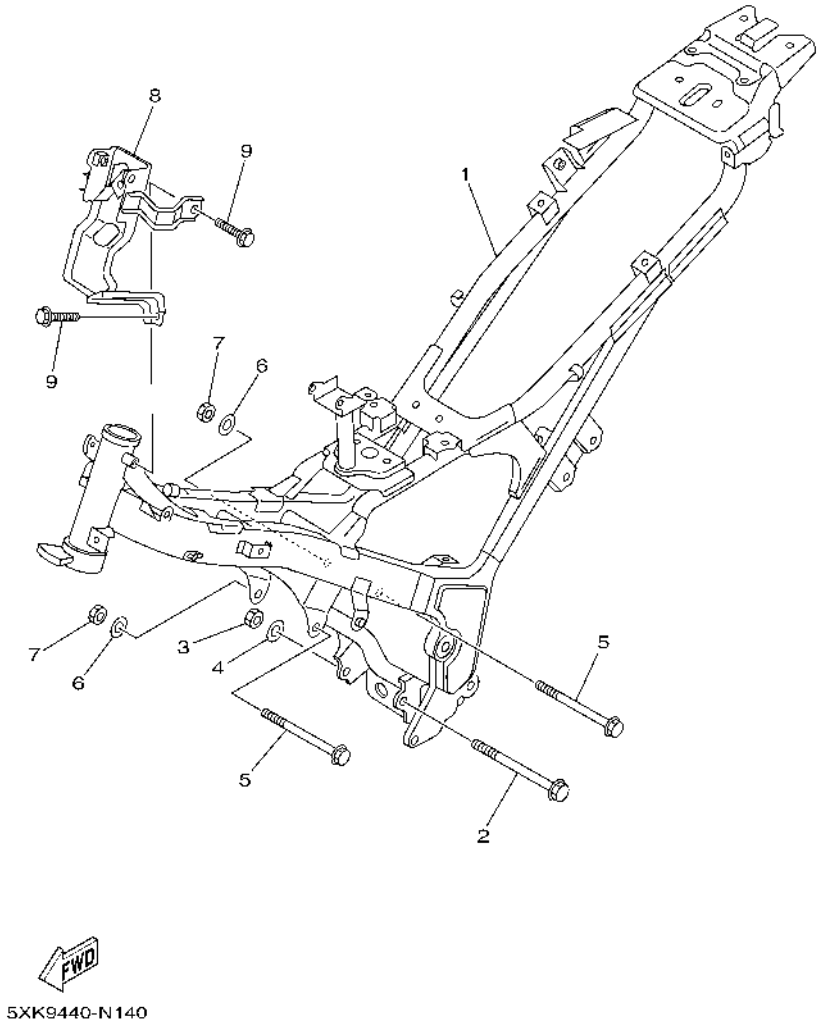

FIG. 14 FRAME

REF. NO.	PART NO.	DESCRIPTION	5XK9	5XKA				REMARKS
1	5XK–F1110–00–33	FRAME COMP.		1				YB FOR DPBMC
	5XK–F1110–00–WN	FRAME COMP.	1					CIS FOR DRMK,SMX
2	90105–10051	BOLT, FLANGE	1	1				
3	95617–10100	NUT, U	1	1				
4	90201–101J1	WASHER, PLATE	1	1				
5	90105–08099	BOLT, FLANGE	2	2				
6	90201–08804	WASHER, PLATE	2	2				
7	95617–08100	NUT, U	2	2				
8	5XK–F1415–10	BRACKET, FRONT UPPER 1	1	1				
9	95807–06014	BOLT, FLANGE	2	2				

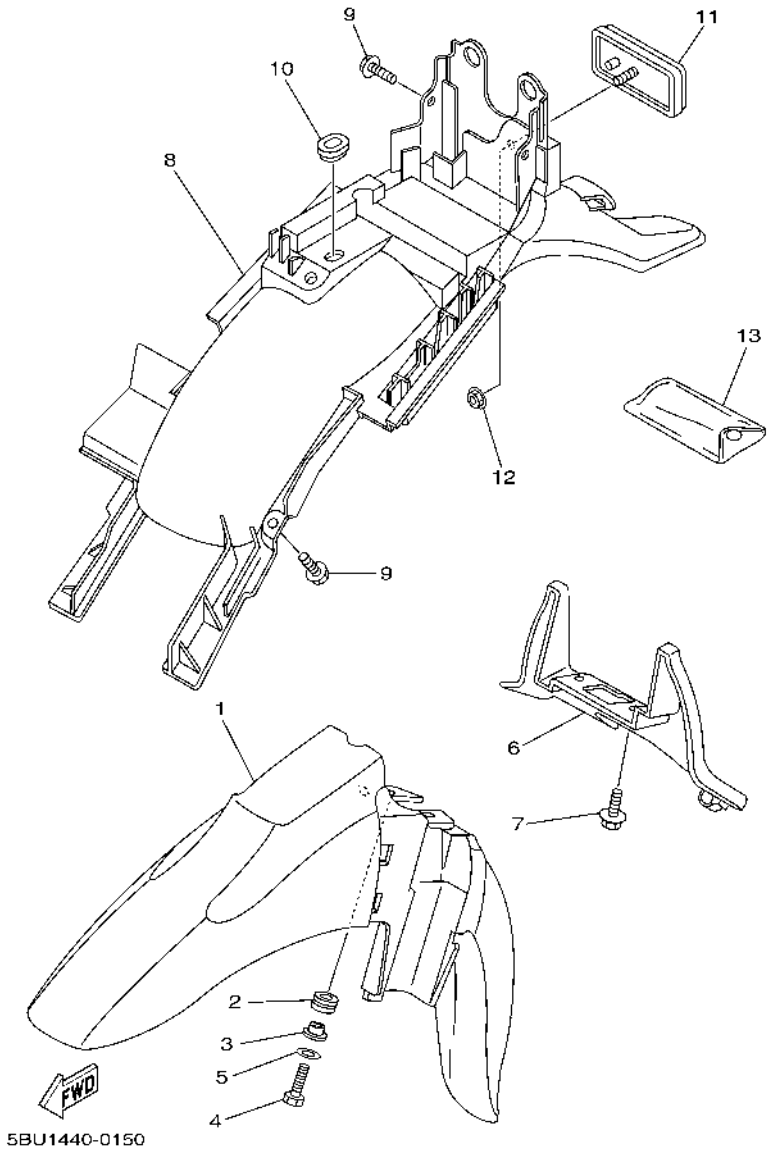

FIG. 15 FENDER

REF. NO.	PART NO.	DESCRIPTION	5XK9	5XKA				REMARKS
1	5BU–F1511–00–P9	FENDER, FRONT	1					UR FOR DRMK
	5BU–F1511–00–P7	FENDER, FRONT	1					UR FOR SMX
	5BU–F1511–00–P3	FENDER, FRONT		1				FOR DPBMC
2	90480–12314	GROMMET	3	3				
3	90387–068J7	COLLAR	3	3				
4	97027–06020	BOLT, HEXAGON	3	3				
5	92907–06600	WASHER, PLATE	3	3				
6	5BU–F1552–00	FENDER, INNER	1	1				
7	90159–06078	SCREW, WITH WASHER	2	2				
8	5BU–F1611–01	FENDER, REAR	1	1				
9	90119–06044	BOLT, WITH WASHER	5	5				
10	90480–01868	GROMMET	1	1				
11	3C1–H5130–00	REAR REFLECTOR ASSY	1	1				
12	95707–05500	NUT, FLANGE	1	1				
13	5XK–F8100–00	TOOL KIT	1	1				

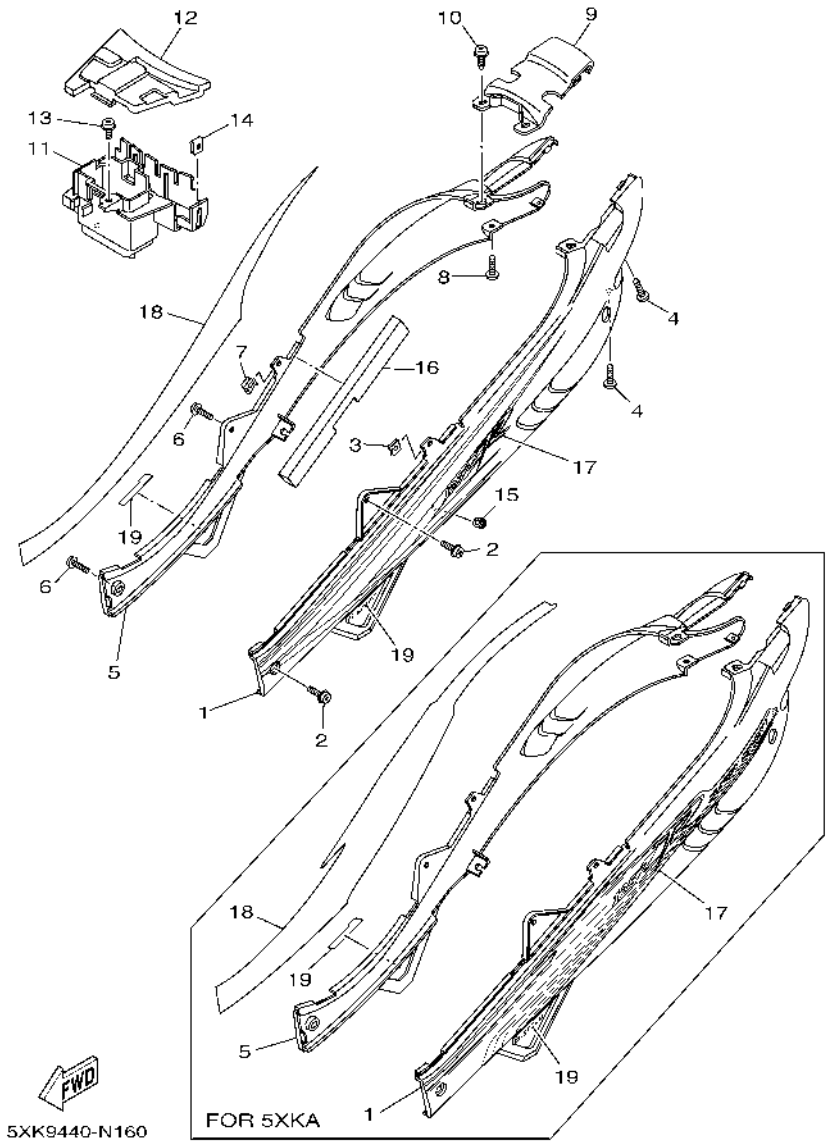

FIG. 16 SIDE COVER

REF. NO.	PART NO.	DESCRIPTION	5XK9	5XKA				REMARKS
1	5BU–F1731–00–2X	COVER, SIDE 3	1					SMX/LGB FOR DRMK
	5BU–F1731–00–P5	COVER, SIDE 3		1				FOR DPBMC
2	90159–06067	SCREW, WITH WASHER	2	2				
3	90183–05042	NUT, SPRING	1	1				
4	97707–50014	SCREW, TRUSS HEAD TAPPING	2	2				
5	5BU–F1741–00–3X	COVER, SIDE 4	1					SMX/LGB FOR DRMK
	5BU–F1741–00–P6	COVER, SIDE 4		1				FOR DPBMC
6	90159–06067	SCREW, WITH WASHER	2	2				
7	90183–05042	NUT, SPRING	1	1				
8	97707–50014	SCREW, TRUSS HEAD TAPPING	1	1				
9	5BU–F171E–00–P6	COVER, SIDE 5	1					SMX FOR DRMK,SMX
	5BU–F171E–00–P5	COVER, SIDE 5		1				FOR DPBMC
10	90159–06067	SCREW, WITH WASHER	2	2				
11	5BU–F177G–00	BOX, BATTERY	1	1				
12	5BU–F124E–00	COVER, BATTERY	1	1				
13	90159–06033	SCREW, WITH WASHER	2	2				
14	90183–06023	NUT, SPRING	2	2				
15	90480–10334	GROMMET	2	2				
16	5BU–F1747–00	DAMPER	1	1				
17	5XK–F173E–E0	GRAPHIC 1	1					UR FOR DRMK
	5XK–F173E–F0	GRAPHIC 1	1					UR FOR SMX
	5XK–F173E–G0	GRAPHIC 1		1				
18	5XK–F173F–E0	GRAPHIC 2	1					UR FOR DRMK
	5XK–F173F–F0	GRAPHIC 2	1					UR FOR SMX
	5XK–F173F–G0	GRAPHIC 2		1				
19	5XK–F1782–10	EMBLEM 2	2	2				

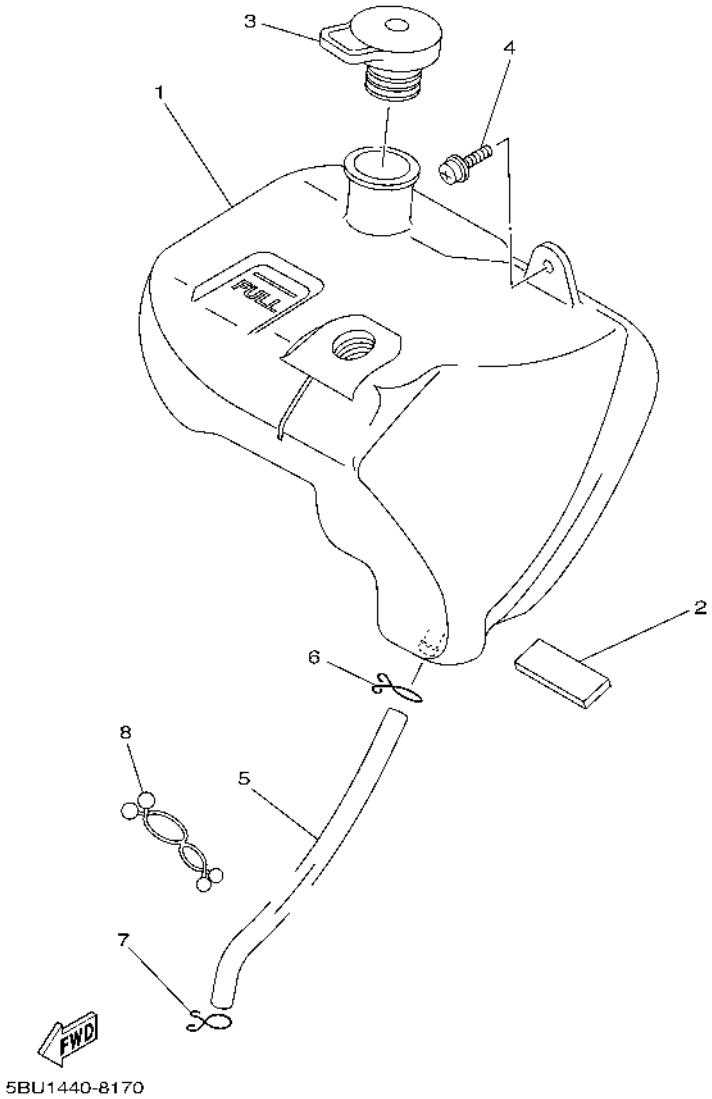

FIG. 17 OIL TANK

REF. NO.	PART NO.	DESCRIPTION	5XK9	5XKA				REMARKS
1	5BU–F1751–00	TANK, OIL	1	1				
2	5BU–F1541–00	DAMPER 1	2	2				
3	2N3–21771–01	BODY, CAP	1	1				
4	90159–06033	SCREW, WITH WASHER	1	1				
5	5BU–F1766–00	PIPE, OIL	1	1				
6	90467–08003	CLIP	1	1				
7	90467–08003	CLIP	1	1				
8	90464–23139	CLAMP	1	1				

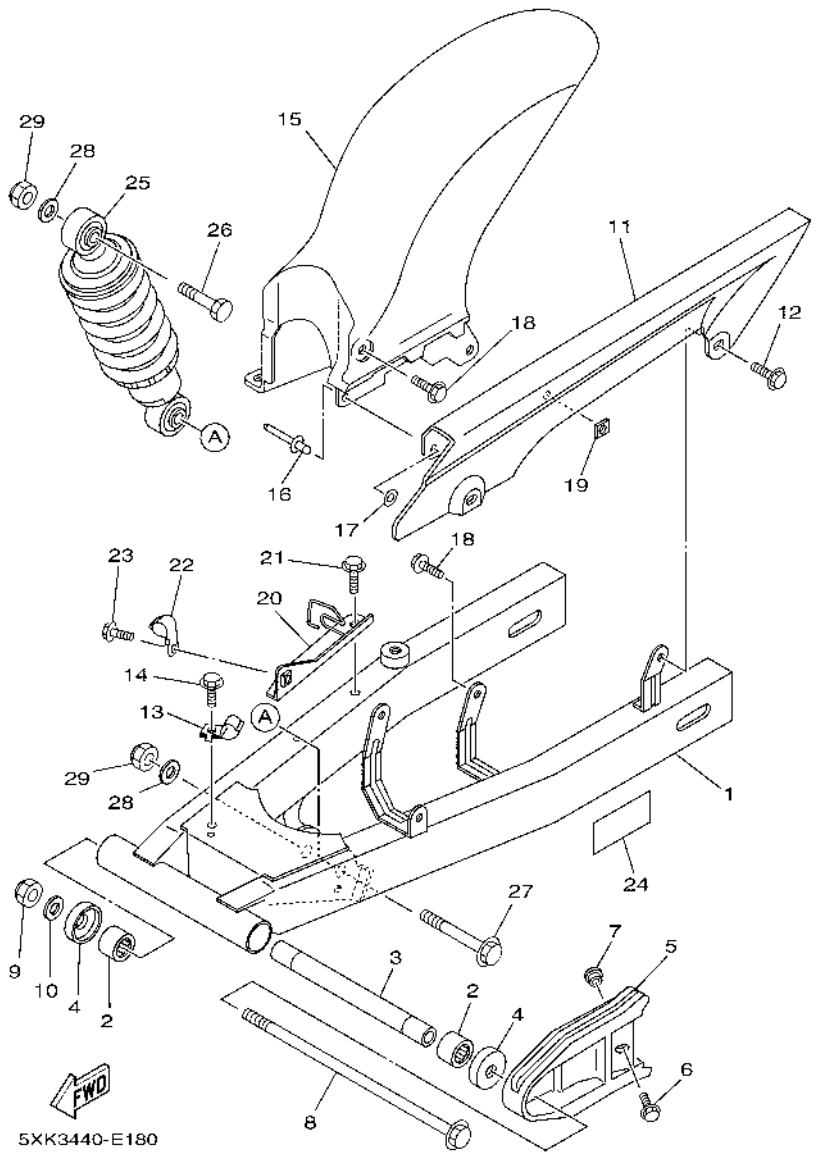

FIG. 18 REAR ARM & SUSPENSION

REF. NO.	PART NO.	DESCRIPTION	5XK9	5XKA				REMARKS
1	5BU–F2110–00–WN	REAR ARM COMP.	1	1				CIS
2	93317–218Y4	BEARING	2	2				
3	5BU–F2184–00	BUSH	1	1				
4	55K–22129–00	COVER, THRUST 2	2	2				
5	5BU–F2151–00	SEAL, GUARD	1	1				
6	90119–06044	BOLT, WITH WASHER	1	1				
7	90387–06681	COLLAR	1	1				
8	3AY–F2141–01	SHAFT, PIVOT	1	1				
9	95614–12100	NUT, U	1	1				
10	90201–12688	WASHER, PLATE	1	1				
11	5BU–F2311–00	CASE, CHAIN	1	1				
12	90119–06117	BOLT, WITH WASHER	2	2				
13	5BU–F5887–00	HOLDER, BRAKE HOSE	1	1				
14	95807–06012	BOLT, FLANGE	1	1				
15	5BU–F1650–00	REAR FENDER COMP.	1	1				
16	90267–32192	RIVET, BLIND (3.2X13.8)	1	1				
17	92907–03200	WASHER	1	1				
18	90119–06117	BOLT, WITH WASHER	2	2				
19	5BU–F2143–00	NUT	1	1				
20	5BU–F5876–00	HOLDER, BRAKE HOSE 2	1	1				
21	95807–06012	BOLT, FLANGE	2	2				
22	5BU–F5887–00	HOLDER, BRAKE HOSE	1	1				
23	95807–06012	BOLT, FLANGE	1	1				
24	3XL–F178A–00	LABEL	1	1				
25	5BU–F2210–04	SHOCK ABSORBER ASSY, REAR	1	1				
26	90101–12570	BOLT	1	1				
27	90105–12660	BOLT, FLANGE	1	1				

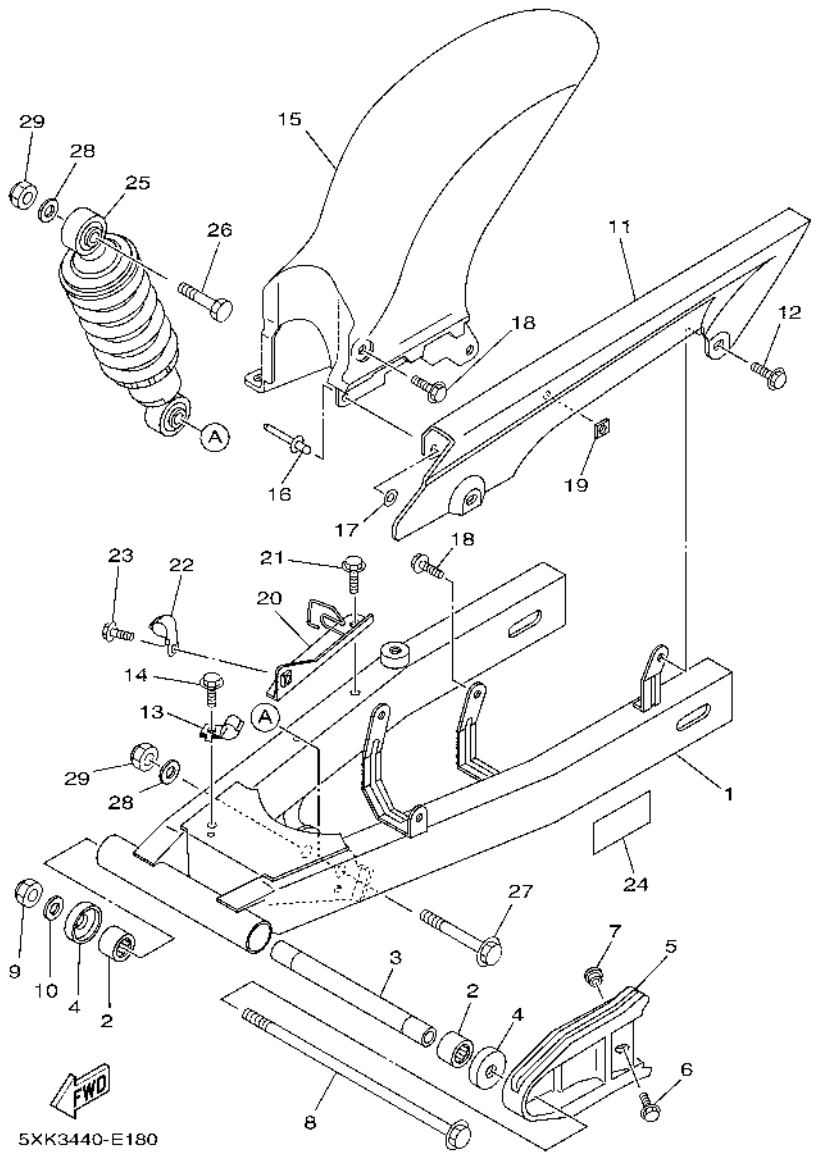

FIG. 18 REAR ARM & SUSPENSION

REF. NO.	PART NO.	DESCRIPTION	5XK9	5XKA				REMARKS
28	90201–12688	WASHER, PLATE	2	2				
29	90185–12046	NUT, SELF-LOCKING	2	2				

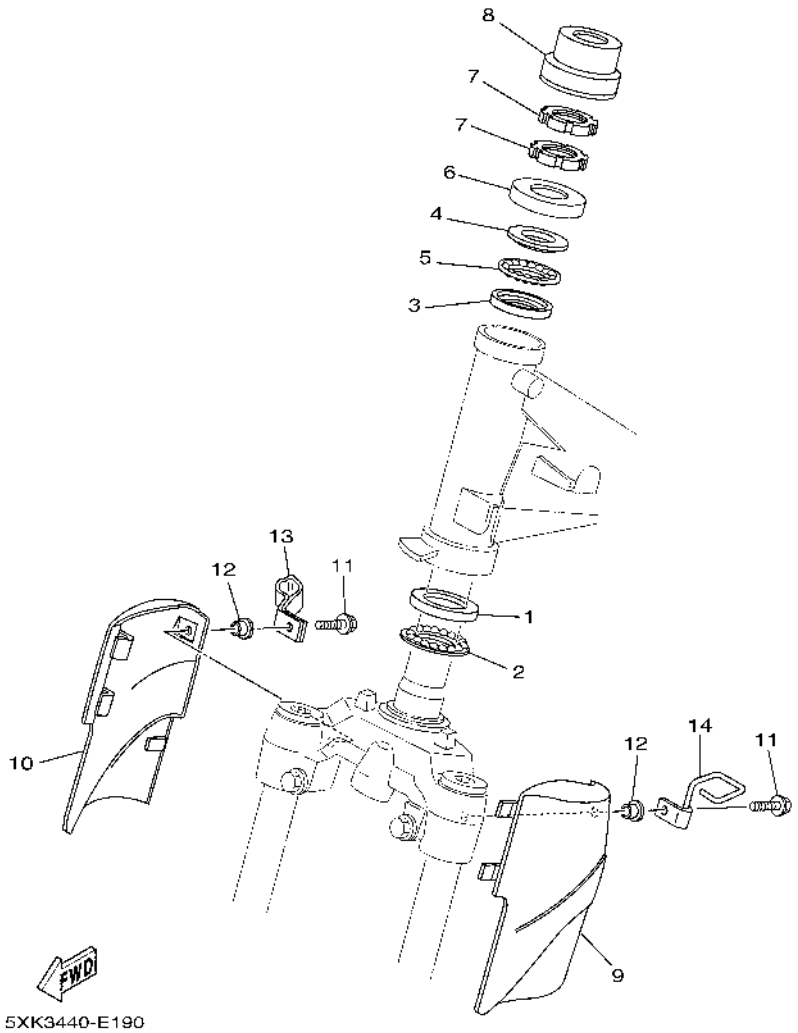

FIG. 19 STEERING

REF. NO.	PART NO.	DESCRIPTION	5XK9	5XKA				REMARKS
1	156–23412–00	RACE, BALL 2	1	1				
2	156–F341E–01	RETAINER, BALL BEARING	1	1				
3	22F–23412–01	RACE, BALL 2	1	1				
4	22F–23411–01	RACE, BALL 1	1	1				
5	22F–F341E–01	RETAINER, BALL BEARING	1	1				
6	3VP–23416–00	COVER, BALL RACE 2	1	1				
7	90179–25802	NUT	2	2				
8	4UV–F3415–00	COVER, BALL RACE 1	1	1				
9	5BU–F3122–00–P9	COVER, OUTER 1	1					UR FOR DRMK
	5BU–F3122–00–P7	COVER, OUTER 1	1					UR FOR SMX
	5BU–F3122–00–P3	COVER, OUTER 1		1				FOR DPBMC
10	5BU–F3132–00–P9	COVER, OUTER 2	1					UR FOR DRMK
	5BU–F3132–00–P7	COVER, OUTER 2	1					UR FOR SMX
	5BU–F3132–00–P3	COVER, OUTER 2		1				FOR DPBMC
11	95027–06016	BOLT, FLANGE	2	2				
12	90387–06681	COLLAR	2	2				
13	5BU–F5886–00	HOLDER, BRAKE HOSE	1	1				
14	5BU–F3317–00	HOLDER, CABLE	1	1				

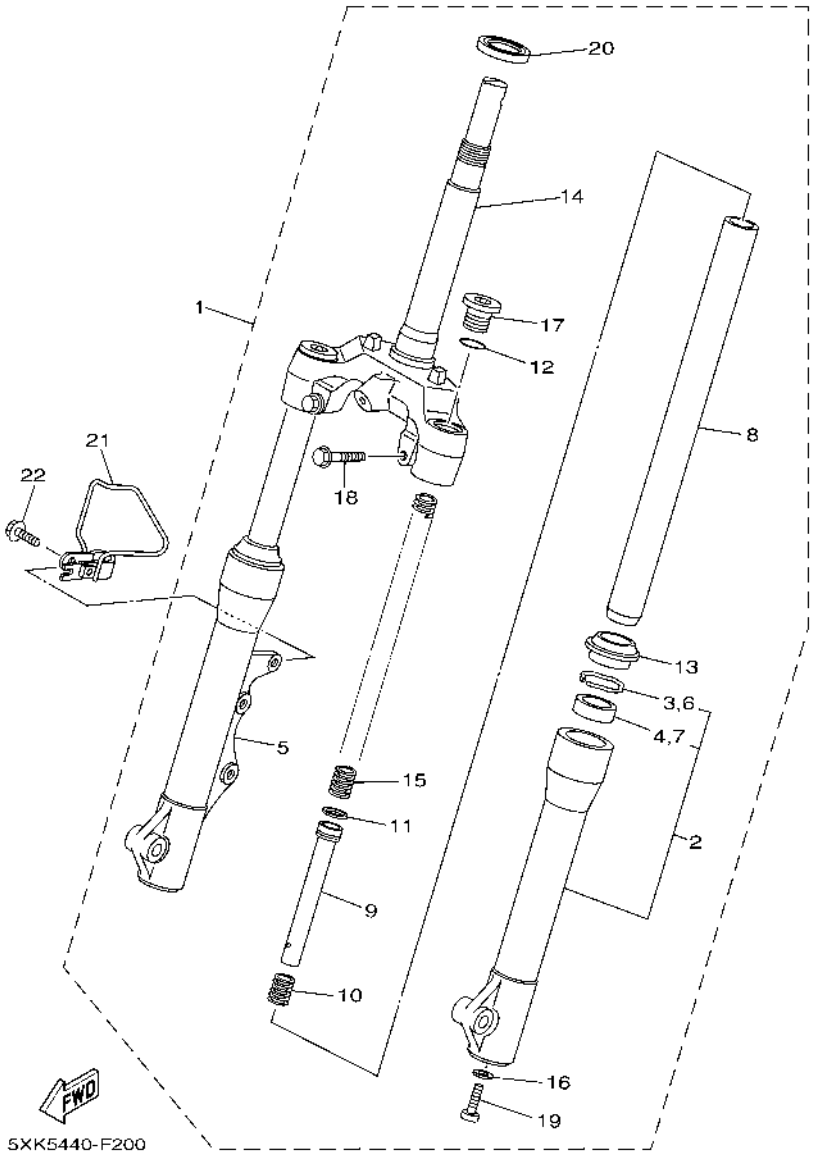

FIG. 20 FRONT FORK

REF. NO.	PART NO.	DESCRIPTION	5XK9	5XKA				REMARKS
1	5XK–F3100–00	FRONT FORK ASSY	1	1				
2	5BU–F3126–00	.TUBE, OUTER (L.H)	1	1				
3	5BU–F3145–00	..OIL SEAL	1	1				
4	2M6–F3156–00	..RING, SNAP	1	1				
5	5XK–F3136–00	.TUBE, OUTER	1	1				
6	5BU–F3145–00	..OIL SEAL	1	1				
7	2M6–F3156–00	..RING, SNAP	1	1				
8	5BU–F3110–01	.INNER TUBE COMP.1	2	2				
9	5BU–F3170–01	.CYLINDER COMP., FRONT FORK	2	2				
10	5BU–F3152–00	.SPRING, SUB	2	2				
11	5BU–F3157–00	.RING, PISTON	2	2				
12	2JG–F3147–00	.O-RING	2	2				
13	5BU–F3144–00	.SEAL, DUST	2	2				
14	5BU–F3340–00	.UNDER BRACKET COMP.	1	1				
15	5BU–F3141–02	.SPRING, FRONT FORK	2	2				
16	509–F3158–L0	.GASKET	2	2				
17	5LL–F3111–00	.BOLT, CAP	2	2				
18	5LL–F3346–00	.BOLT 1	2	2				
19	278–F3181–50	.BOLT, HEXAGON SOCKET HEAD	2	2				
20	18G–23411–00	.RACE, BALL 1	1	1				
21	5TF–F331E–00	GUIDE, CABLE	1	1				
22	95027–06025	BOLT, FLANGE	1	1				

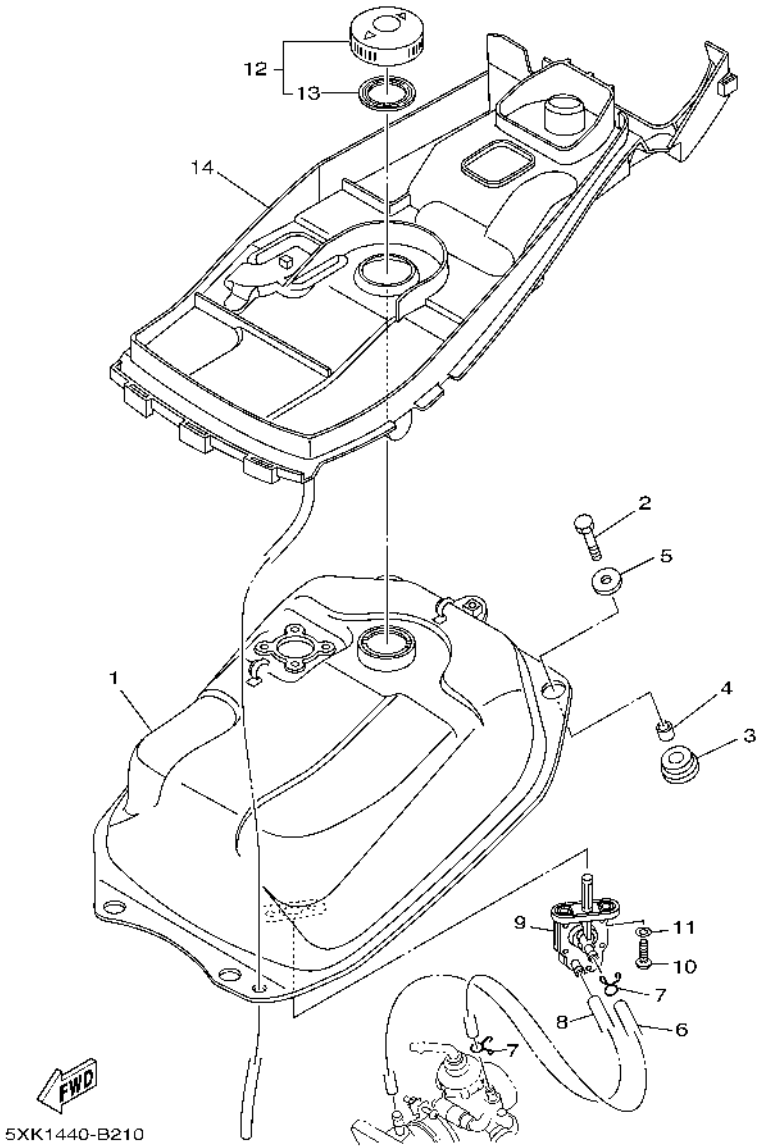

FIG. 21 FUEL TANK

REF. NO.	PART NO.	DESCRIPTION	5XK9	5XKA				REMARKS
1	5XK–F4110–00	FUEL TANK COMP.	1	1				
2	97007–06020	BOLT	4	4				
3	90480–18476	GROMMET	4	4				
4	90387–07674	COLLAR	4	4				
5	90201–064K6	WASHER, PLATE	4	4				
6	5BU–F4312–00	PIPE 2	1	1				
7	90467–10008	CLIP	2	2				
8	5BU–F416A–00	HOSE	1	1				
9	4TT–F4500–00	FUEL COCK ASSY 1	1	1				
10	90149–06011	SCREW	2	2				
11	90202–05193	WASHER, PLATE	2	2				
12	5LW–F4610–00	CAP ASSY	1	1				
13	5LW–F4612–00	.PACKING, CAP	1	1				
14	5XK–F4198–00	SEAT, RUBBER	1	1				

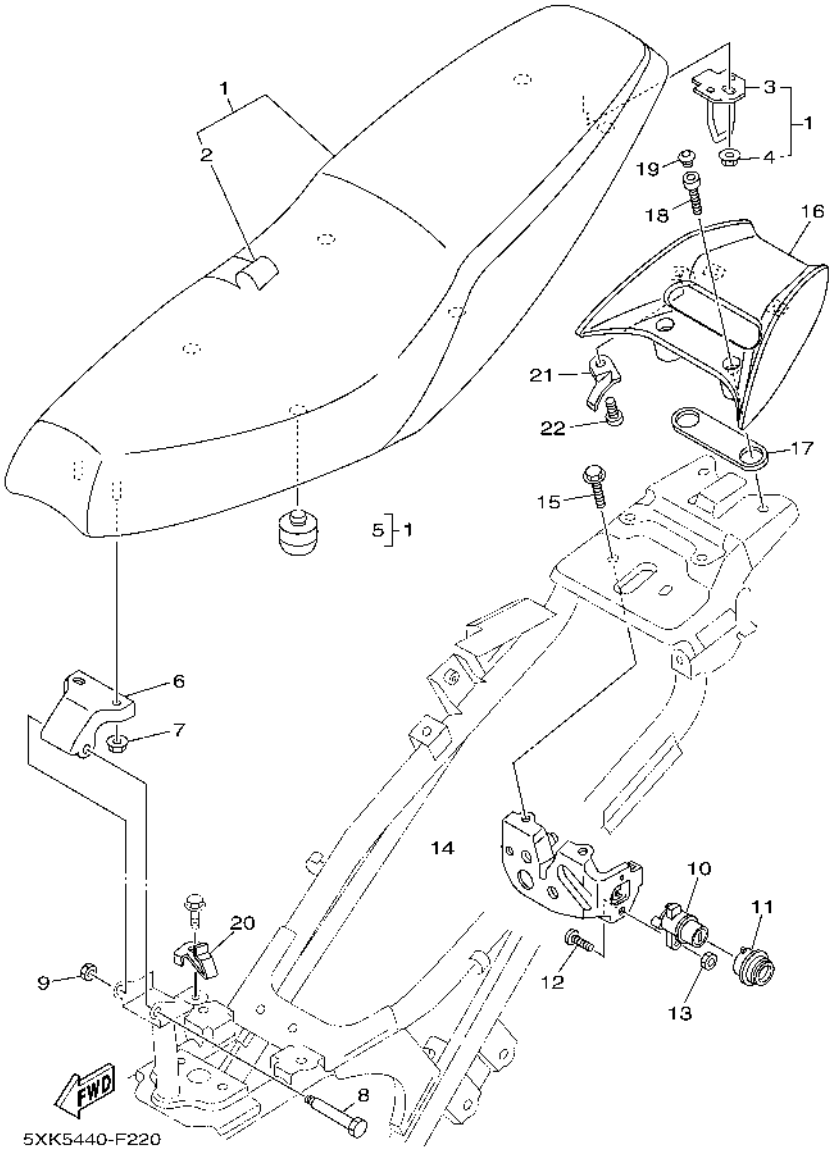

FIG. 22 SEAT

REF. NO.	PART NO.	DESCRIPTION	5XK9	5XKA				REMARKS
1	5XK–F4730–00	DOUBLE SEAT ASSY	1	1				
2	5XK–F470F–00	.SEAT COVER COMP.	1	1				
3	5BU–F4728–00	.BRACKET, SEAT	1	1				
4	95707–06500	.NUT, FLANGE	1	1				
5	2JG–F4741–00	.PAD, SEAT	6	6				
6	5BU–F4726–00	HINGE, SEAT	1	1				
7	95707–06500	NUT, FLANGE	2	2				
8	90109–065E0	BOLT	1	1				
9	95607–06100	NUT, U	1	1				
10	5XK–F4799–01	ROTOR ASSY	1	1				
11	2JG–F4796–00	COVER	1	1				
12	98507–06016	SCREW, PAN HEAD	1	1				
13	95607–06100	NUT, U	1	1				
14	5BU–F4780–00	SEAT LOCK ASSY	1	1				
15	95807–06012	BOLT, FLANGE	2	2				
16	5XK–F4773–00–P6	HANDLE, SEAT	1					UR FOR DRMK
	5XK–F4773–00–P7	HANDLE, SEAT	1					UR MBL2 FOR SMX
	5XK–F4773–00–P2	HANDLE, SEAT		1				FOR DPBMC
17	5XK–F4742–00	GROMMET	1	1				
18	91317–08035	BOLT	2	2				
19	341–23469–00	CAP, BOLT	2	2				
20	5BU–F1398–00	HANGER, HELMET	1	1				
21	5XK–H336T–00	HOLDER 1	1	1				
22	98507–04006	SCREW, PAN HEAD	1	1				

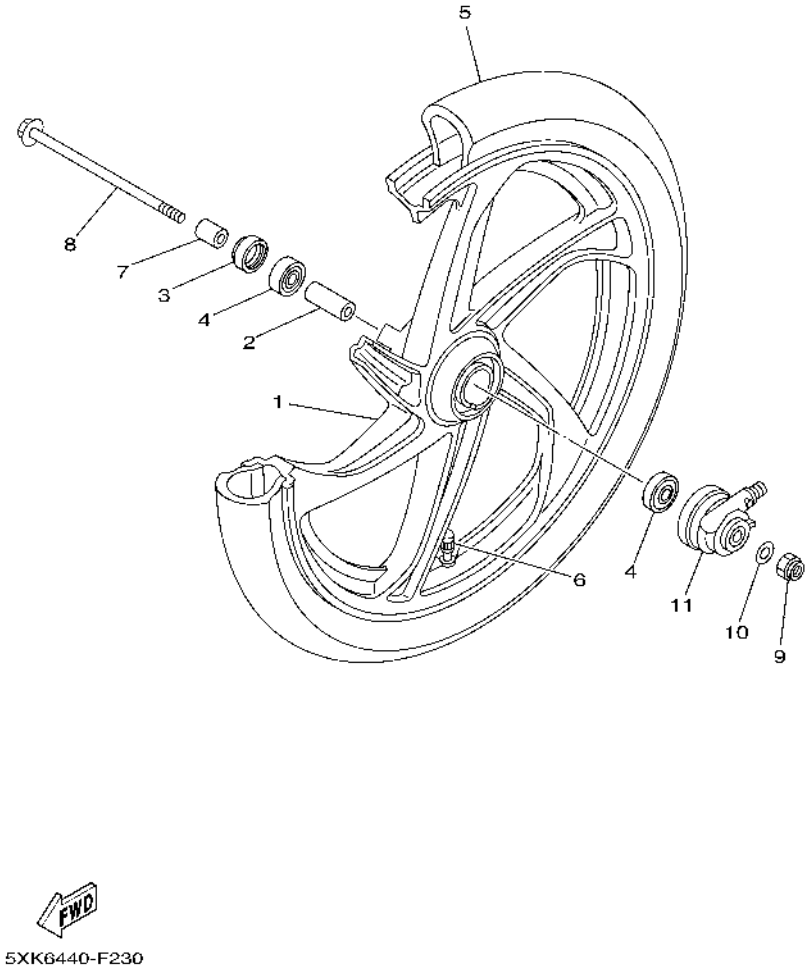

FIG. 23 FRONT WHEEL

REF. NO.	PART NO.	DESCRIPTION	5XK9	5XKA				REMARKS
1	5XK–F5168–00–33	CAST WHEEL, FRONT	1					YB FOR DRMK,SMX
	5XK–F5168–00–0X	CAST WHEEL, FRONT		1				DPBMC/W FOR DPBMC
2	90560–10292	SPACER	1	1				
3	93106–20816	OIL SEAL	1	1				
4	93306–30003	BEARING	2	2				UR
	93306–300Y9	BEARING	2	2				UR
	93306–300X8	BEARING	2	2				UR
5	94107–17817	TIRE (70/90-17 38P)	1	1				VEE RUBBER
6	93900–00817	VALVE, RIM (TR412)	1	1				
7	90387–10277	COLLAR	1	1				
8	3AY–F5181–01	AXLE, WHEEL	1	1				
9	90185–10091	NUT, SELF-LOCKING	1	1				
10	90201–101J1	WASHER, PLATE	1	1				
11	5TF–F5190–00	GEAR UNIT ASSY	1	1				

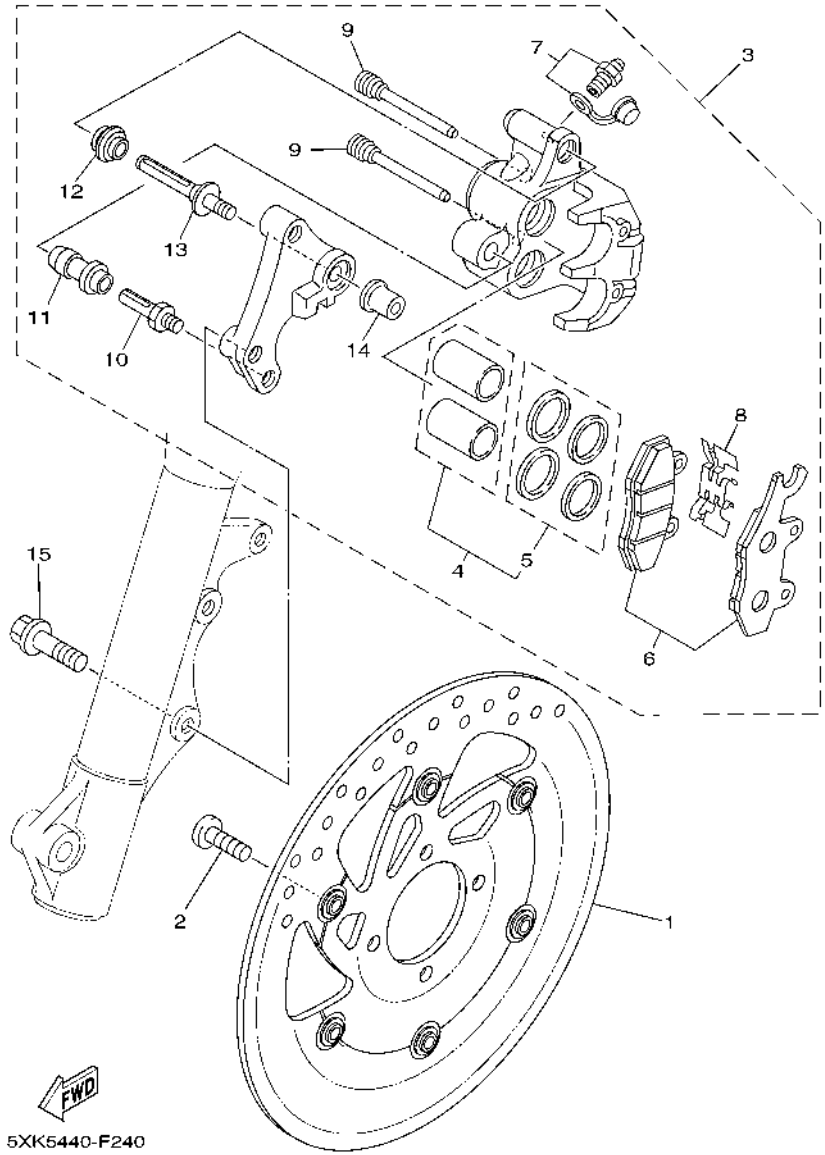

FIG. 24 FRONT BRAKE CALIPER

REF. NO.	PART NO.	DESCRIPTION	5XK9	5XKA				REMARKS
1	5XK–F582U–00	DISK, BRAKE (RIGHT)	1	1				
2	90109–08718	BOLT	4	4				
3	5XK–F580U–00	CALIPER ASSY (RIGHT)	1	1				
4	5BU–WF057–00	.PISTON ASSY, CALIPER	1	1				
5	3LC–WF047–50	..CALIPER SEAL KIT	1	1				
6	5XK–W0045–00	.BRAKE PAD KIT	1	1				
7	1UY–WF048–50	.BLEED SCREW KIT	1	1				
8	3LD–F5934–01	.SPRING, PAD	1	1				
9	3LD–F5924–00	.PIN, PAD	2	2				
10	3SP–25914–51	.PIN, SLIDE	1	1				
11	1UY–25937–51	.BOOT 2	1	1				
12	3JD–25917–00	.BOOT, CALIPER	1	1				
13	5NM–2536G–00	.PIN	1	1				
14	3JD–F5961–00	.NUT	1	1				
15	90105–10638	BOLT, FLANGE	2	2				

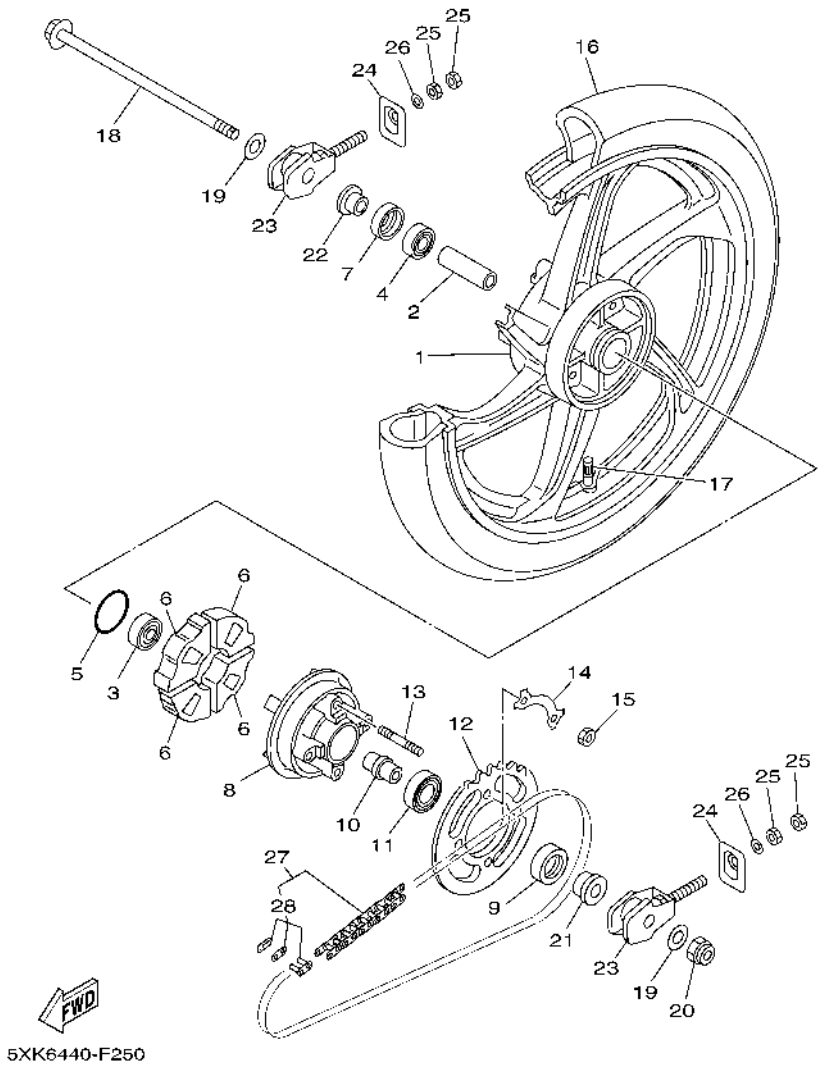

FIG. 25 REAR WHEEL

REF. NO.	PART NO.	DESCRIPTION	5XK9	5XKA				REMARKS
1	5XK–F5338–00–33	CAST WHEEL, REAR	1					YB FOR DRMK,SMX
	5XK–F5338–00–0X	CAST WHEEL, REAR		1				DPBMC/W FOR DPBMC
2	90387–123A9	COLLAR	1	1				
3	93306–301XC	BEARING	1	1				UR
	93306–301YM	BEARING	1	1				UR
4	93306–301YW	BEARING	1	1				
5	93210–41041	O-RING	1	1				
6	5H3–F5364–00	DAMPER	4	4				
7	93106–20817	OIL SEAL	1	1				
8	5XK–F5366–00	CLUTCH, HUB	1	1				
9	93106–30817	OIL SEAL	1	1				
10	90387–128A5	COLLAR	1	1				
11	93306–004XN	BEARING	1	1				UR
	93306–004YD	BEARING	1	1				UR
12	5BU–F5443–10	SPROCKET, DRIVEN (43T)	1	1				
13	90109–08864	BOLT	4	4				
14	5YP–F5412–00	WASHER	2	2				
15	90179–08639	NUT	4	4				
16	94108–17815	TIRE (80/90-17 44P)	1	1				VEE RUBBER
17	93900–00817	VALVE, RIM (TR412)	1	1				
18	3AY–F2141–01	SHAFT, PIVOT	1	1				
19	90201–120T5	WASHER, PLATE	2	2				
20	90185–12046	NUT, SELF-LOCKING	1	1				
21	90387–12807	COLLAR	1	1				
22	90387–123N2	COLLAR	1	1				
23	5BU–F5388–00	PULLER, CHAIN 1	2	2				
24	5BU–F2174–00	END 1	2	2				

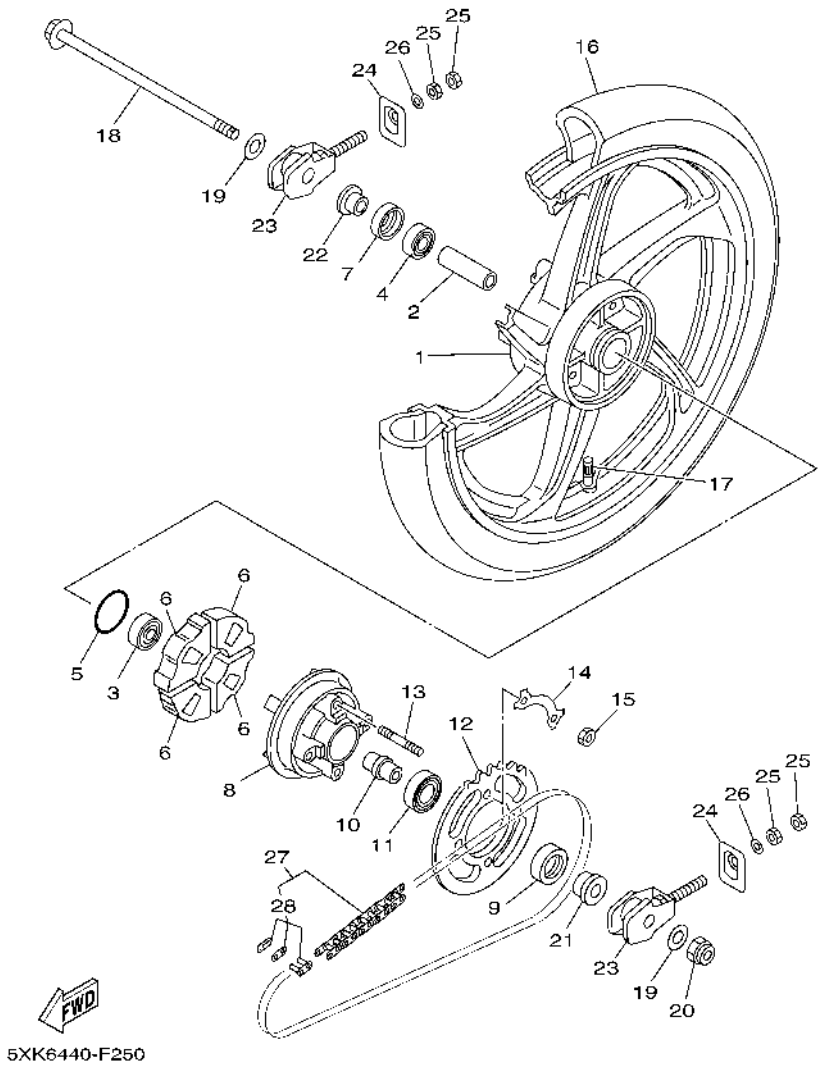

FIG. 25 REAR WHEEL

REF. NO.	PART NO.	DESCRIPTION	5XK9	5XKA				REMARKS
25	95307–08600	NUT	4	4				
26	92907–08600	WASHER, PLATE	2	2				
27	94508–30120	CHAIN (DID 428H 120L)	1	1				
28	94608–30001	.JOINT, CHAIN (DID 428H)	1	1				

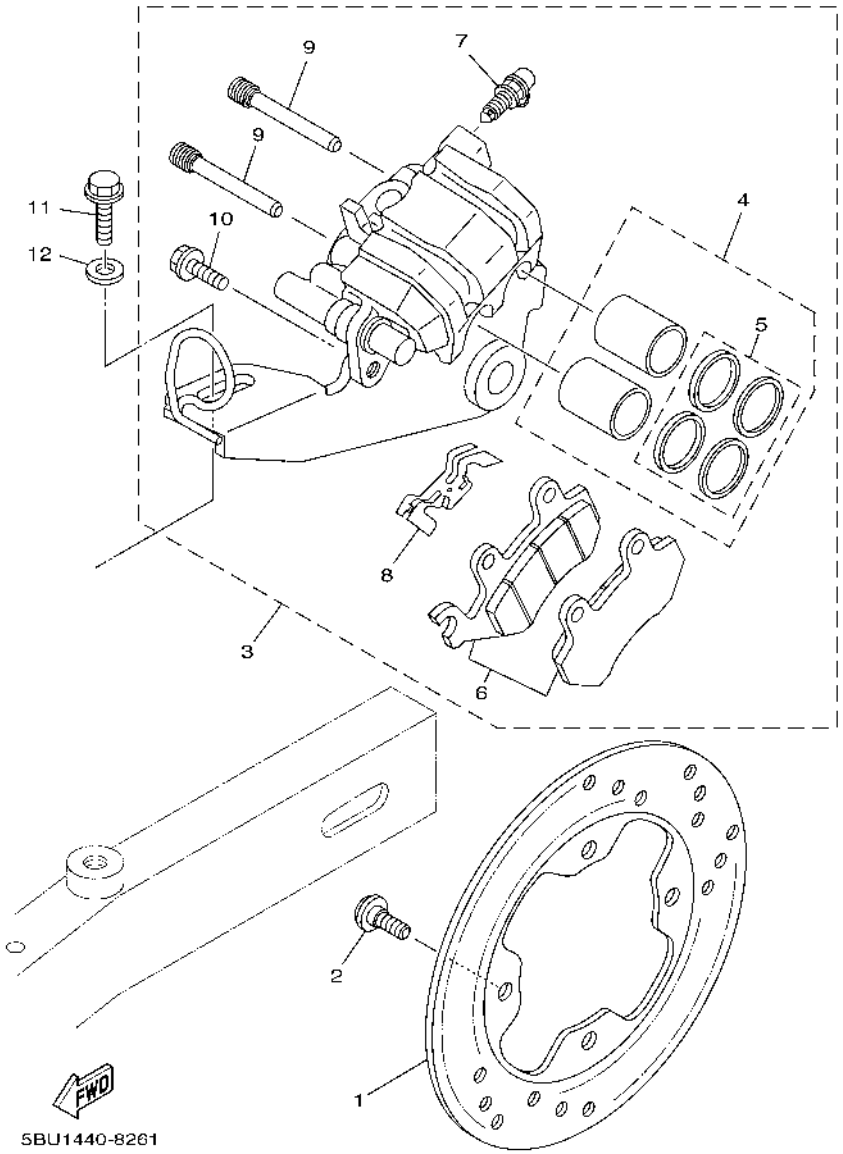

FIG. 26 REAR BRAKE CALIPER

REF. NO.	PART NO.	DESCRIPTION	5XK9	5XKA				REMARKS
1	5BU–F582W–00	DISK, REAR BRAKE 2	1	1				
2	90149–08268	SCREW	4	4				
3	5BU–2580W–00	CALIPER ASSY, REAR 2	1	1				
4	5BU–W0057–50	.PISTON ASSY, CALIPER	1	1				
5	3LC–W0047–50	..CALIPER SEAL KIT	1	1				
6	5BU–W0046–00	.BRAKE PAD KIT 2	1	1				
7	1UY–W0048–50	.BLEED SCREW KIT	1	1				
8	3LD–25934–01	.SPRING, PAD	1	1				
9	3SP–25924–51	.PIN, PAD	2	2				
10	5BU–24834–00	.BOLT	2	2				
11	95827–10030	BOLT, FLANGE	1	1				
12	90201–10140	WASHER, PLATE	1	1				

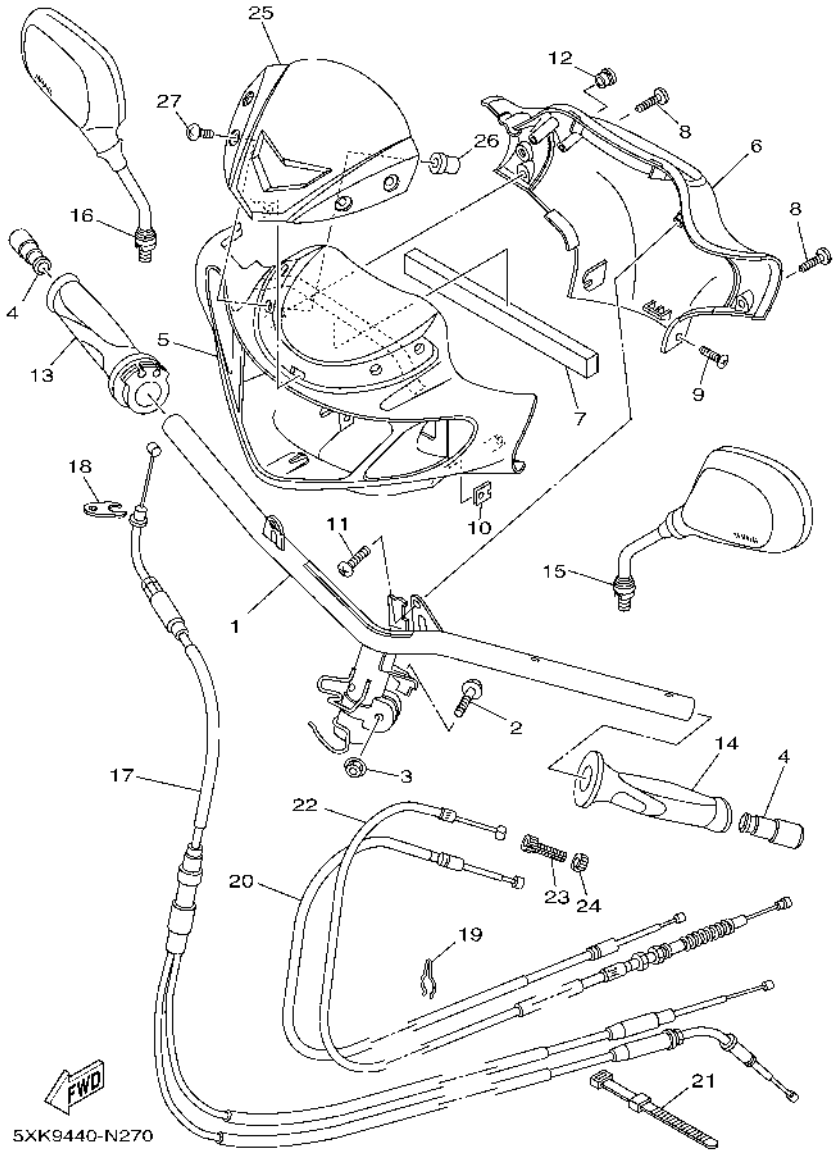

FIG. 27 STEERING HANDLE & CABLE

REF. NO.	PART NO.	DESCRIPTION	5XK9	5XKA				REMARKS
1	5BU–F6210–00	HANDLE	1	1				
2	90105–10036	BOLT, FLANGE	1	1				
3	90185–10154	NUT, SELF-LOCKING	1	1				
4	5BU–F6246–00	END, GRIP	2	2				
5	5XK–F6143–10–P1	COVER, HANDLE UPPER 1	1					UR FOR DRMK
	5XK–F6143–10–P2	COVER, HANDLE UPPER 1	1					UR FOR SMX
	5XK–F6143–10–P3	COVER, HANDLE UPPER 1		1				FOR DPBMC
6	5BU–F6145–00	COVER, HANDLE UPPER 2	1	1				
7	5BU–H4164–00	DAMPER	1	1				
8	97707–50016	SCREW, TRUSS HEAD TAPPING	2	2				
9	97707–50016	SCREW, TRUSS HEAD TAPPING	2	2				
10	90183–05042	NUT, SPRING	2	2				
11	97707–50016	SCREW, TRUSS HEAD TAPPING	2	2				
12	1S8–F6199–00	PLUG, BLIND	1	1				
13	5BU–F6240–00	GRIP ASSY	1	1				
14	5BU–F6241–00	GRIP	1	1				
15	5LW–F6280–10	REAR VIEW MIRROR ASSY (LEFT)	1	1				
16	5LW–F6290–10	REAR VIEW MIRROR ASSY (RIGHT)	1	1				
17	5BU–F6260–00	CABLE ASSY, THROTTLE & PUMP	1	1				
18	5TF–F6393–00	HOLDER	1	1				
19	90468–08086	CLIP	1	1				
20	5BU–F6331–00	CABLE, STARTER 1	1	1				
21	90464–50801	CLAMP	1	1				
22	5BU–F6335–00	CABLE, CLUTCH	1	1				
23	90123–08046	BOLT	1	1				
24	90170–08401	NUT	1	1				
25	5XK–F8381–10	WINDSHIELD	1	1				

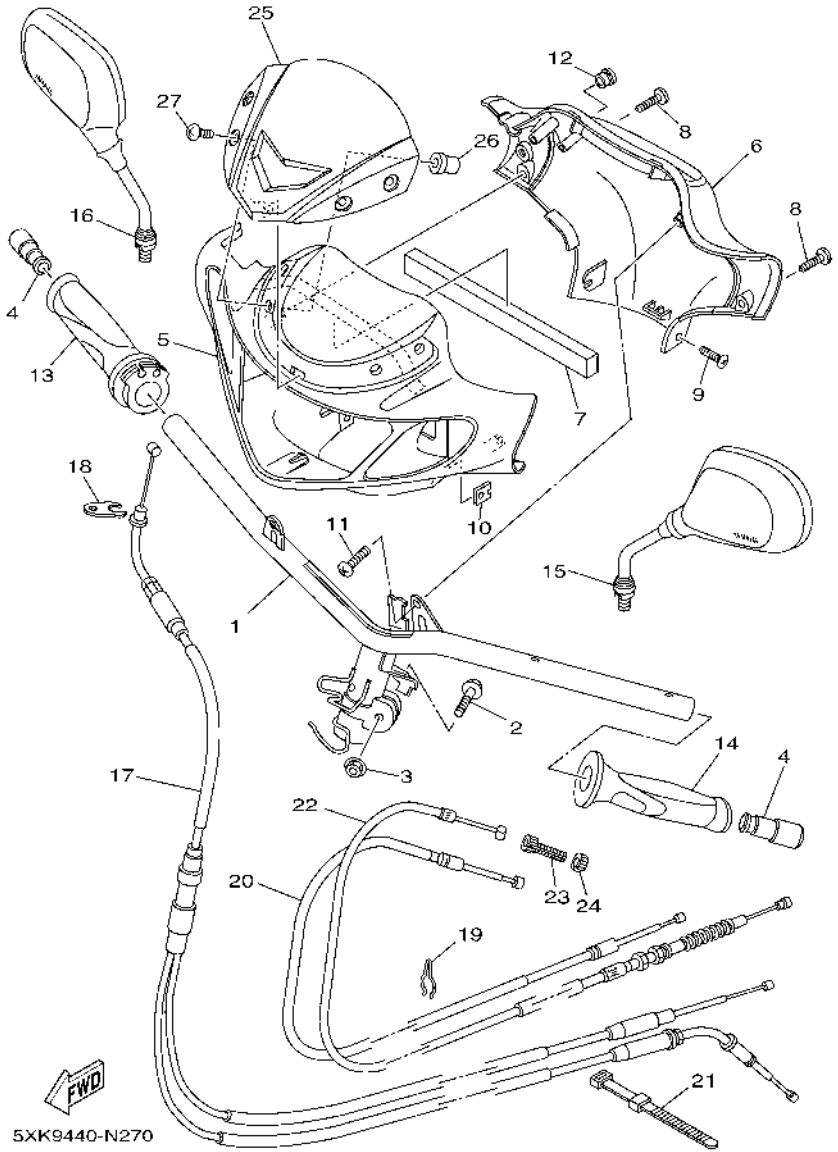

FIG. 27 STEERING HANDLE & CABLE

REF. NO.	PART NO.	DESCRIPTION	5XK9	5XKA				REMARKS
26	90179–05802	NUT	4	4				
27	90150–05806	SCREW, ROUND HEAD	4	4				

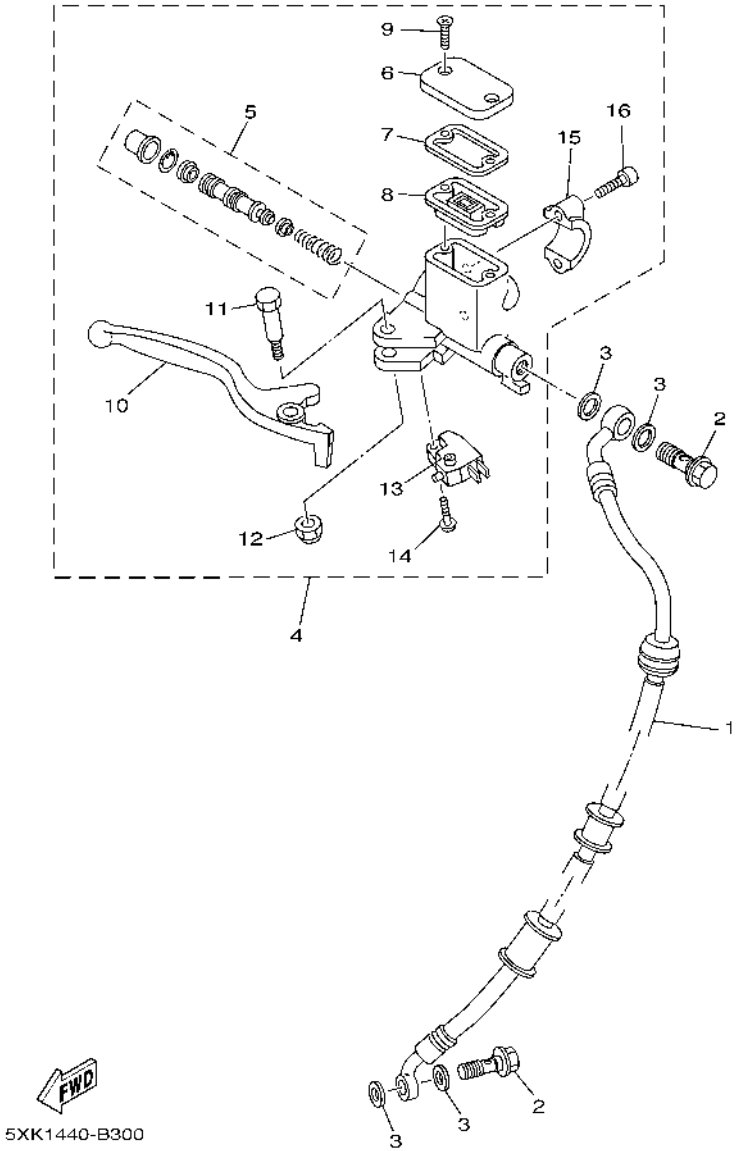

FIG. 28 FRONT MASTER CYLINDER

REF. NO.	PART NO.	DESCRIPTION	5XK9	5XKA				REMARKS
1	5XK–F5872–10	HOSE, BRAKE 1	1	1				
2	90401–10159	BOLT, UNION	2	2				
3	90201–10118	WASHER, PLATE	4	4				
4	5LN–F583T–01	MASTER CYLINDER ASSY	1	1				
5	5HV–W0042–50	.CYLINDER KIT, MASTER	1	1				
6	5HV–F5852–00	.CAP, RESERVOIR	1	1				
7	5HV–F585B–00	.PLATE, DIAPHRAGM	1	1				
8	5HV–F5854–00	.DIAPHRAGM, RESERVOIR	1	1				
9	9870M–04012	.SCREW, FLAT HEAD	2	2				
10	5TN–H3922–00	.LEVER 2	1	1				
11	90109–06577	.BOLT	1	1				
12	9560M–06100	.NUT, U	1	1				
13	5LW–H3980–00	.FRONT STOP SWITCH ASSY	1	1				
14	9760L–04212	.SCREW, PAN HEAD	1	1				
15	56A–F5867–00	.BRACKET, MASTER CYLINDER	1	1				
16	5LW–F6332–00	.BOLT	2	2				

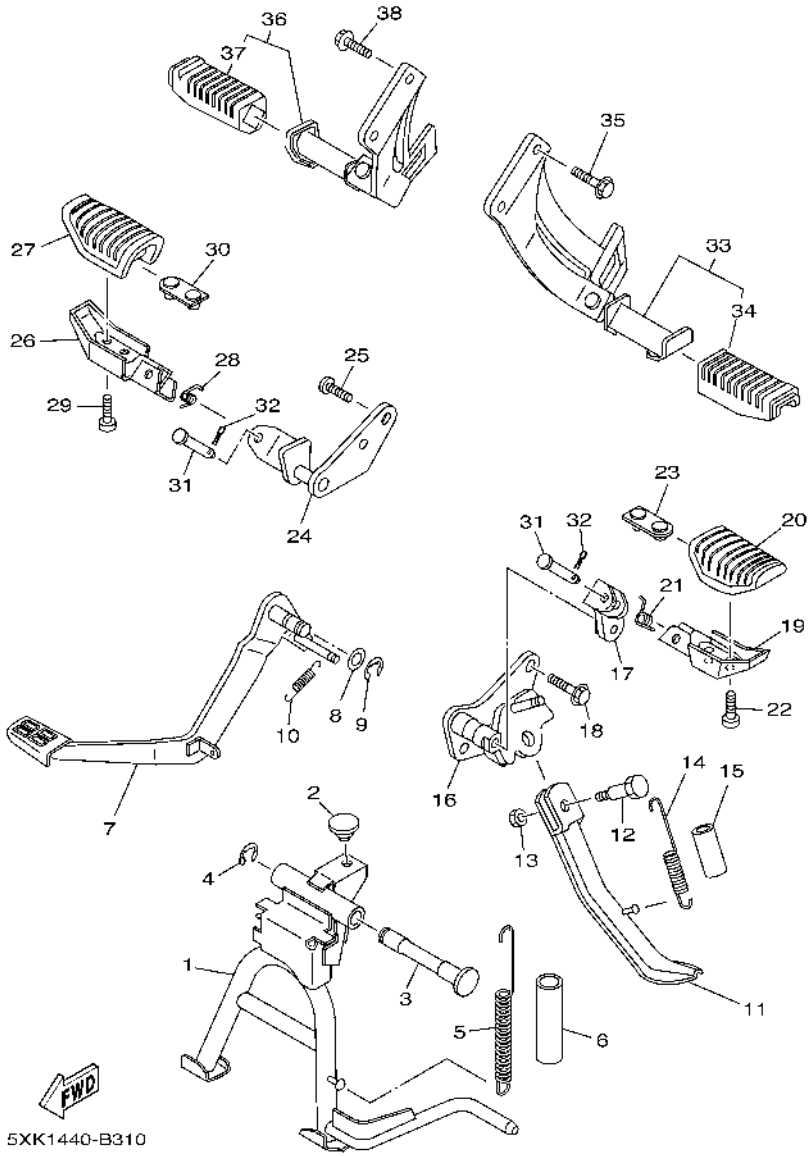

FIG. 29 STAND & FOOTREST

REF. NO.	PART NO.	DESCRIPTION	5XK9	5XKA				REMARKS
1	5BU–F7111–00	STAND, MAIN	1	1				
2	5BU–F7214–00	STOPPER	1	1				
3	439–27112–00	SHAFT, MAIN STAND	1	1				
4	93430–12008	CIRCLIP	1	1				
5	90506–35474	SPRING, TENSION	1	1				
6	90445–228B8	HOSE	1	1				
7	5BU–F7211–00	PEDAL, BRAKE	1	1				
8	90201–14411	WASHER, PLATE	1	1				
9	93430–10015	CIRCLIP	1	1				
10	90506–20369	SPRING, TENSION	1	1				
11	5BU–F7311–00	STAND, SIDE	1	1				
12	90109–08034	BOLT	1	1				
13	95307–08700	NUT	1	1				
14	90506–20514	SPRING, TENSION	1	1				
15	90445–21848	HOSE (L70)	1	1				
16	5XK–F7452–00	BRACKET, FOOTREST 1	1	1				
17	5XK–F7422–00	BRACKET, FOOTREST 2	1	1				
18	95827–10020	BOLT, FLANGE	2	2				
19	5AB–F7451–01	FOOTREST	1	1				
20	5AB–F7413–00	COVER, FOOTREST	1	1				
21	90508–20023	SPRING, TORSION	1	1				
22	91317–06012	BOLT	2	2				
23	5AB–F7425–00	BRACKET, FOOTREST 2	1	1				
24	5BU–F7462–00	BRACKET, FOOTREST 2	1	1				
25	92017–08020	BOLT, BUTTON HEAD	2	2				
26	5AB–F7461–01	FOOTREST	1	1				
27	5AB–F7413–00	COVER, FOOTREST	1	1				

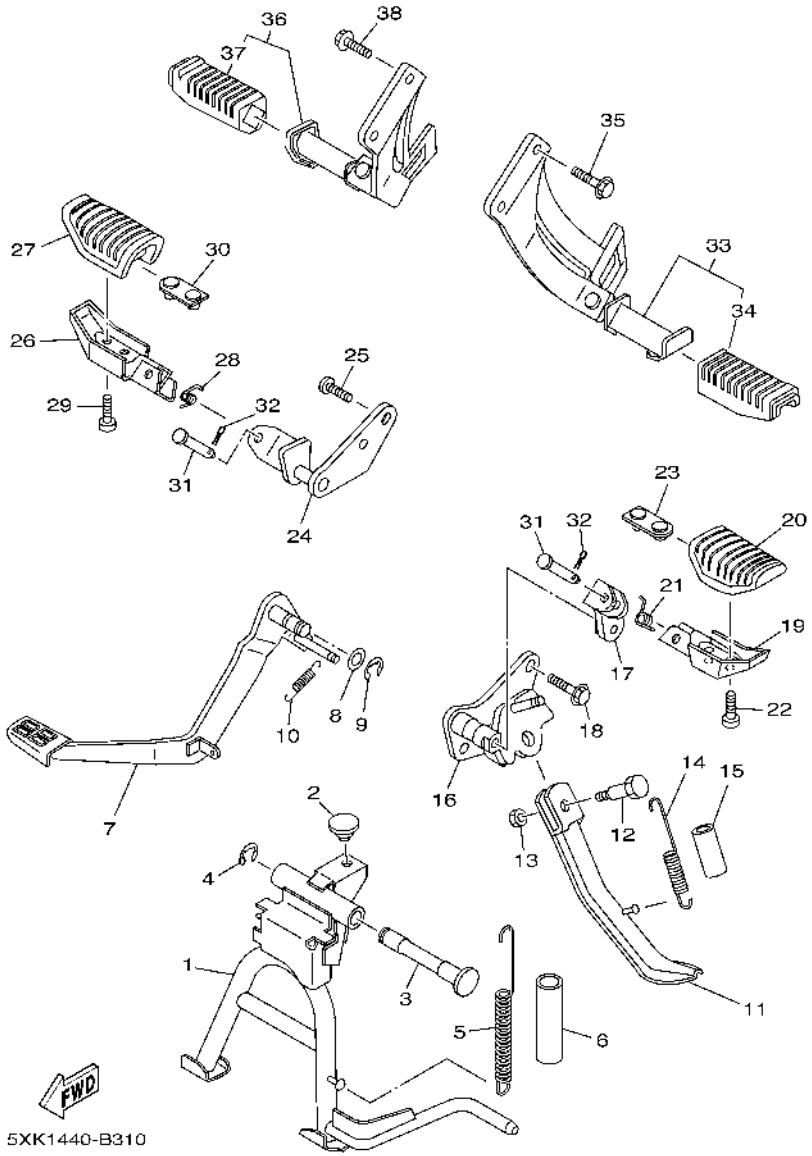

FIG. 29 STAND & FOOTREST

REF. NO.	PART NO.	DESCRIPTION	5XK9	5XKA				REMARKS
28	90508–20631	SPRING, TORSION	1	1				
29	91317–06012	BOLT	2	2				
30	5AB–F7425–00	BRACKET, FOOTREST 2	1	1				
31	90240–08084	PIN, CLEVIS	2	2				
32	90252–23800	PIN, COTTER	2	2				
33	5XK–F7430–00	REAR FOOTREST ASSY 1	1	1				
34	5BU–F7433–00	.COVER, REAR FOOTREST	1	1				
35	95807–08020	BOLT, FLANGE	2	2				
36	5XK–F7440–00	REAR FOOTREST ASSY 2	1	1				
37	5BU–F7444–00	.COVER, REAR FOOTREST	1	1				
38	95807–08020	BOLT, FLANGE	2	2				

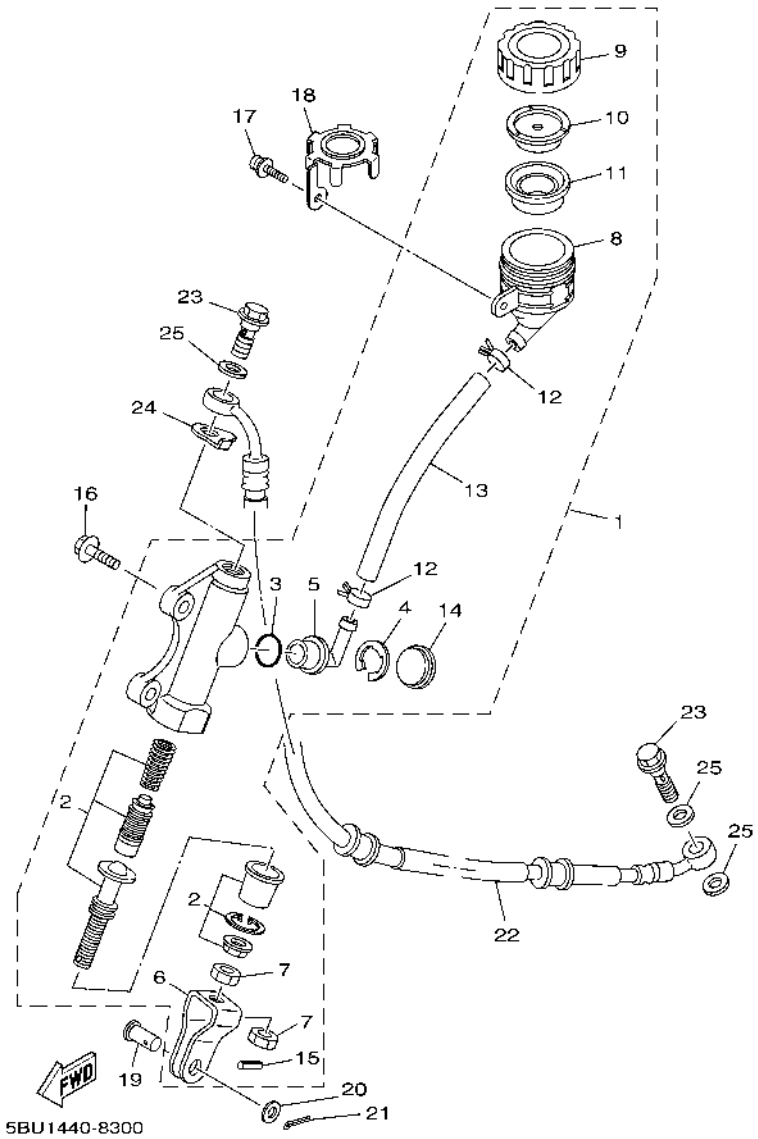

FIG. 30 REAR MASTER CYLINDER

REF. NO.	PART NO.	DESCRIPTION	5XK9	5XKA				REMARKS
1	5BU–2583V–00	RR. MASTER CYLINDER ASSY.	1	1				
2	5BU–W0042–50	.CYLINDER KIT, MASTER	1	1				
3	93210–15620	.O-RING	1	1				
4	2VN–25866–00	.CIRCLIP	1	1				
5	4ML–2582A–50	.JOINT	1	1				
6	2YK–27222–00	.JOINT	1	1				
7	95301–08700	.NUT	2	2				
8	4EW–25894–00	.TANK, RESERVOIR	1	1				
9	2VN–25852–00	.CAP, RESERVOIR	1	1				
10	2VN–25855–00	.BUSH,DIAPHRAGM	1	1				
11	2VN–25854–00	.DIAPHRAGM, RESERVOIR	1	1				
12	90467–12085	.CLIP	2	2				
13	5BU–25895–00	.HOSE, RESERVOIR	1	1				
14	3FV–2589A–00	.COVER, DUST	1	1				
15	5BU–27234–00	.PIN, BRAKE ROD	1	1				
16	95827–06020	BOLT, FLANGE	2	2				
17	90159–06056	SCREW, WITH WASHER	1	1				
18	5BU–F5888–00	COVER, RESERVOIR TANK	1	1				
19	90240–08124	PIN, CLEVIS	1	1				
20	90201–08083	WASHER, PLATE	1	1				
21	91401–16012	PIN, COTTER	1	1				
22	5XK–F5873–00	HOSE, BRAKE 2	1	1				
23	90401–10159	BOLT, UNION	2	2				
24	5XK–F5844–00	WASHER, LOCK	1	1				
25	90201–10118	WASHER, PLATE	3	3				

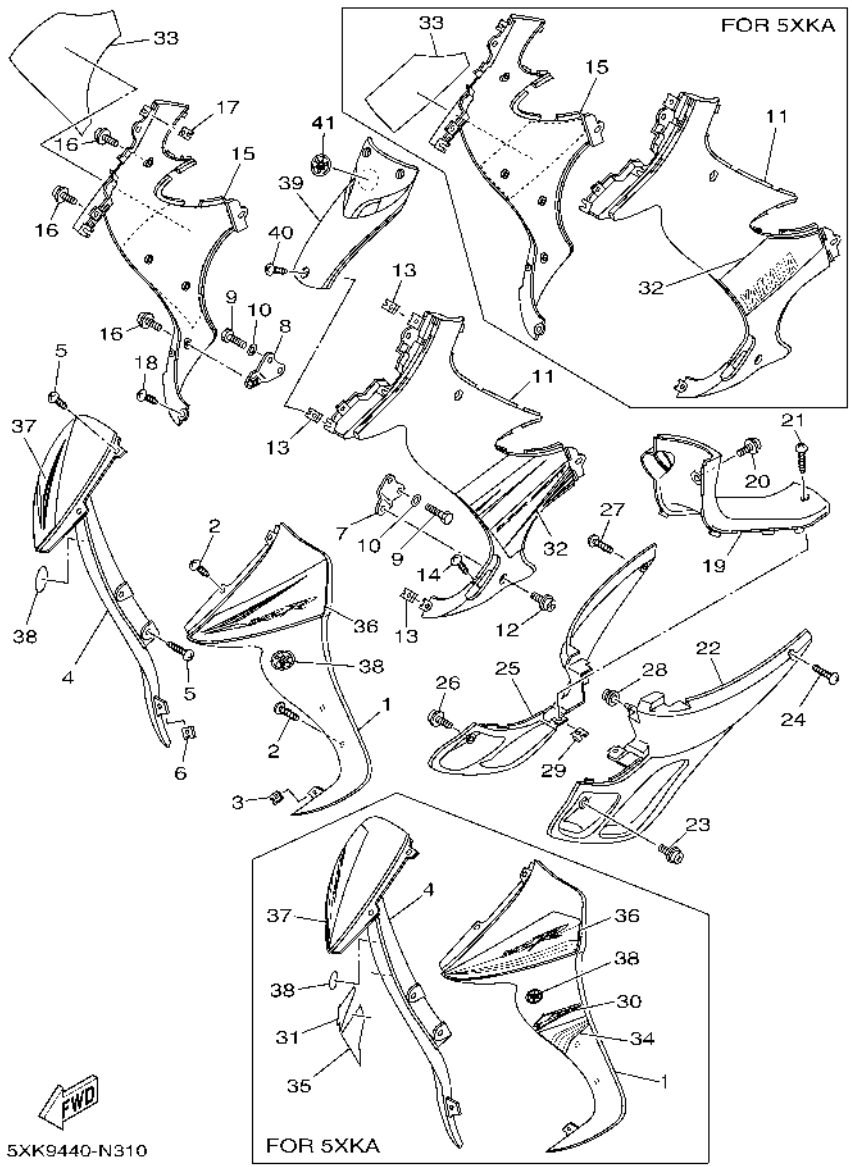

FIG. 31 COWLING 1

REF. NO.	PART NO.	DESCRIPTION	5XK9	5XKA				REMARKS
1	5XK–F8311–00–P2	LEG SHIELD 1	1					UR FOR DRMK
	5XK–F8311–00–P0	LEG SHIELD 1	1					UR FOR SMX
	5XK–F8311–00–P3	LEG SHIELD 1		1				FOR DPBMC
2	97707–50012	SCREW, TRUSS HEAD TAPPING	4	4				
3	90183–05042	NUT, SPRING	1	1				
4	5XK–F8312–00–P2	LEG SHIELD 2	1					UR FOR DRMK
	5XK–F8312–00–P0	LEG SHIELD 2	1					UR FOR SMX
	5XK–F8312–00–P3	LEG SHIELD 2		1				FOR DPBMC
5	97707–50012	SCREW, TRUSS HEAD TAPPING	4	4				
6	90183–05042	NUT, SPRING	1	1				
7	5BU–F8321–00	STAY 1	1	1				
8	5BU–F8322–00	STAY 2	1	1				
9	97007–06012	BOLT	4	4				
10	92907–06600	WASHER, PLATE	4	4				
11	5XK–F8385–00	COVER, UNDER	1	1				
12	90159–06165	SCREW, WITH WASHER	3	3				
13	90183–05042	NUT, SPRING	6	6				
14	97707–50014	SCREW, TRUSS HEAD TAPPING	1	1				
15	5XK–F8395–00	COVER, UNDER 2	1	1				
16	90159–06165	SCREW, WITH WASHER	3	3				
17	90183–05042	NUT, SPRING	3	3				
18	97707–50014	SCREW, TRUSS HEAD TAPPING	3	3				
19	5BU–F842M–00	COVER 1	1	1				
20	90159–06165	SCREW, WITH WASHER	1	1				
21	97707–50014	SCREW, TRUSS HEAD TAPPING	1	1				
22	5BU–F842N–00	COVER 2	1	1				
23	90159–06165	SCREW, WITH WASHER	1	1				

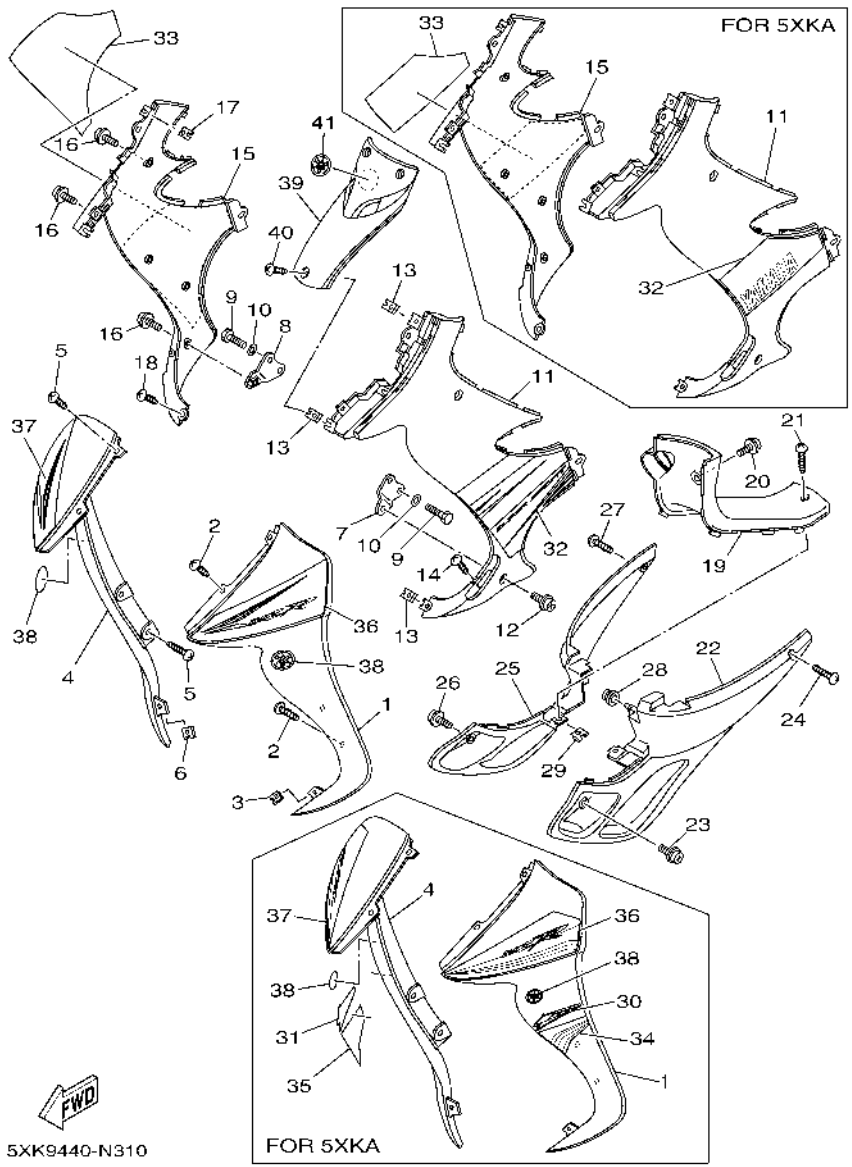

FIG. 31 COWLING 1

REF. NO.	PART NO.	DESCRIPTION	5XK9	5XKA				REMARKS
24	97707–50012	SCREW, TRUSS HEAD TAPPING	1	1				
25	5BU–F843J–00	COVER 3	1	1				
26	90159–06165	SCREW, WITH WASHER	1	1				
27	97707–50012	SCREW, TRUSS HEAD TAPPING	1	1				
28	90480–13809	GROMMET	1	1				
29	90183–05042	NUT, SPRING	1	1				
30	5XK–F8391–00	GRAPHIC 1		1				
31	5XK–F8392–00	GRAPHIC 2		1				
32	5XK–F8393–E0	GRAPHIC 3	1					UR FOR DRMK
	5XK–F8393–F0	GRAPHIC 3	1					UR FOR SMX
	5XK–F8393–G0	GRAPHIC 3		1				
33	5XK–F8394–E0	GRAPHIC 4	1					UR FOR DRMK
	5XK–F8394–F0	GRAPHIC 4	1					UR FOR SMX
	5XK–F8394–G0	GRAPHIC 4		1				
34	5XK–F8398–00	GRAPHIC 5		1				
35	5XK–F8399–00	GRAPHIC 6		1				
36	5XK–F839H–E0	EMBLEM 1	1					UR FOR DRMK
	5XK–F839H–F0	EMBLEM 1	1					UR FOR SMX
	5XK–F839H–G0	EMBLEM 1		1				
37	5XK–F841J–E0	EMBLEM 2	1					UR FOR DRMK
	5XK–F841J–F0	EMBLEM 2	1					UR FOR SMX
	5XK–F841J–G0	EMBLEM 2		1				
38	1S8–F175C–00	TUNING FORK MARK	2	2				
39	5BU–F3391–00–P6	PANEL, FRONT	1					UR SMX FOR DRMK
	5BU–F3391–00–P7	PANEL, FRONT	1					UR MBL2 FOR SMX
	5BU–F3391–00–P3	PANEL, FRONT		1				FOR DPBMC
40	97707–50014	SCREW, TRUSS HEAD TAPPING	3	3				

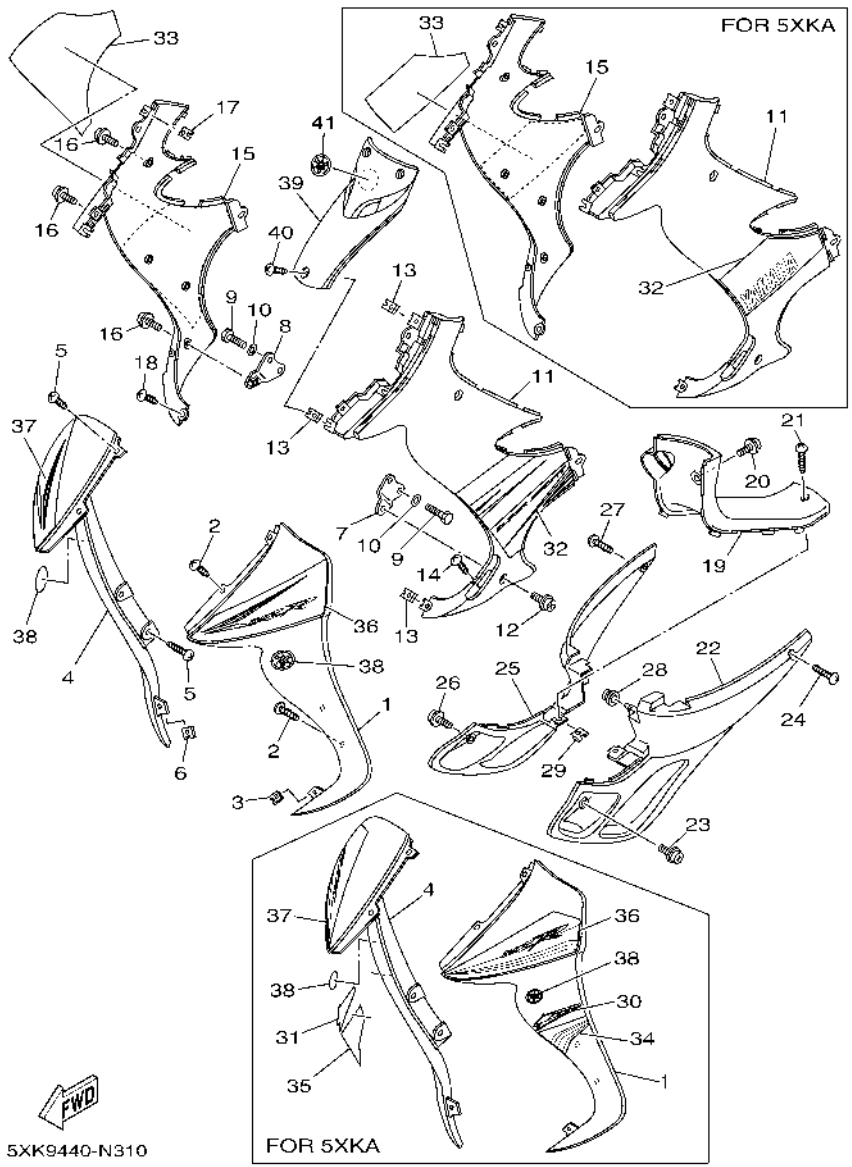

FIG. 31 COWLING 1

REF. NO.	PART NO.	DESCRIPTION	5XK9	5XKA				REMARKS
41	5BU–F836B–00	TUNING FORK MARK	1	1				

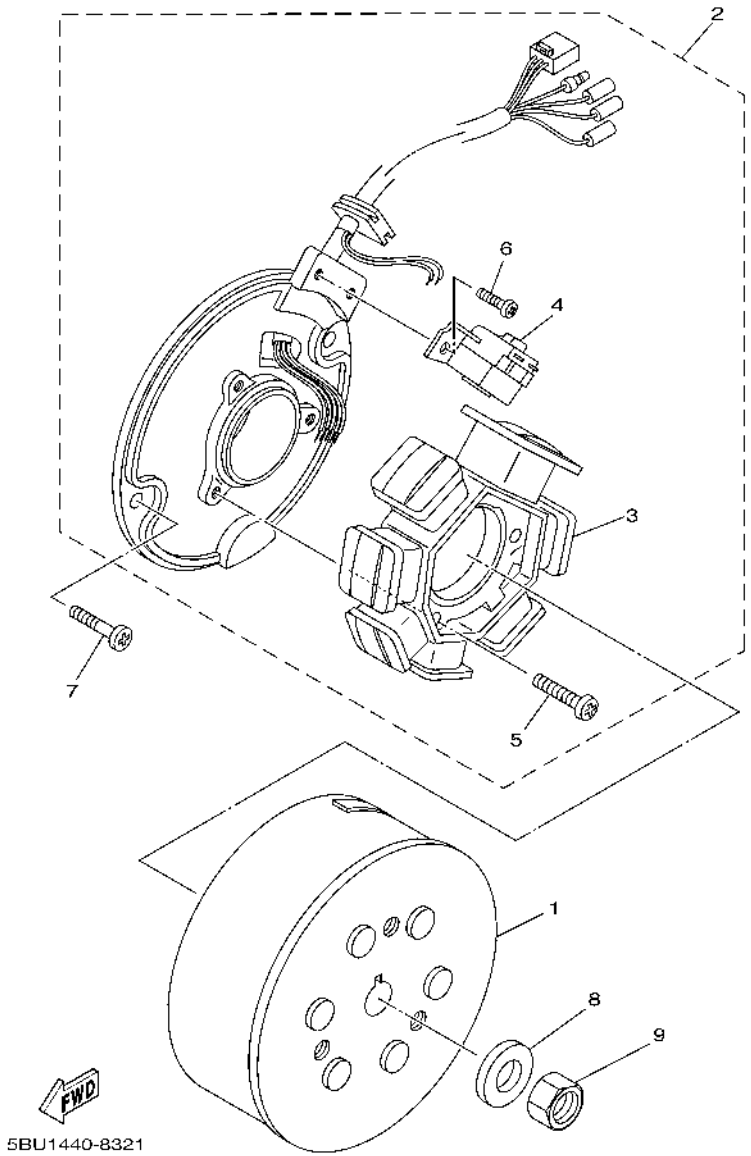

FIG. 32 GENERATOR

REF. NO.	PART NO.	DESCRIPTION	5XK9	5XKA				REMARKS
1	5BU–85550–01	ROTOR ASSY	1	1				
2	5BU–85560–01	BASE ASSY	1	1				
3	4AV–81403–00	.STATORCOMP.	1	1				
4	4KG–85595–01	.COIL, PULSER	1	1				
5	98517–06020	.SCREW, PAN HEAD	3	3				
6	98517–04010	.SCREW, PAN HEAD	2	2				
7	98507–06014	SCREW, PAN HEAD	2	2				
8	90201–12593	WASHER, PLATE	1	1				
9	90170–12368	NUT	1	1				

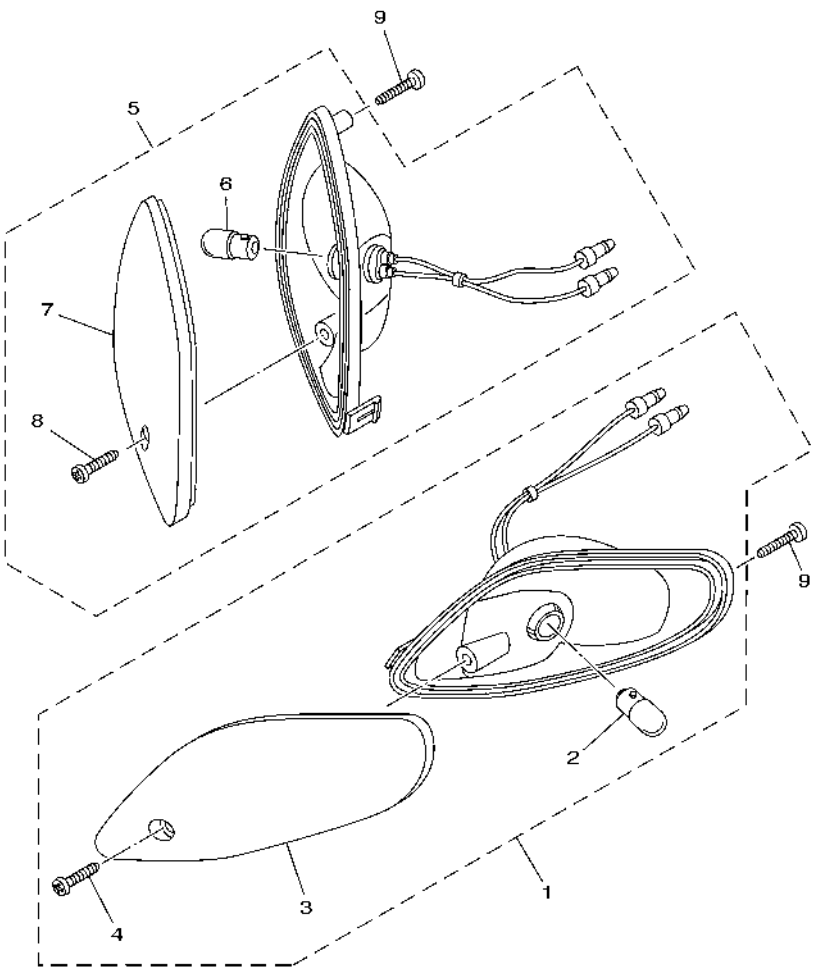

5XK1440-B350

FIG. 33 FLASHER LIGHT

REF. NO.	PART NO.	DESCRIPTION	5XK9	5XKA				REMARKS
1	5XK–H3310–10	FRONT FLASHER LIGHT ASSY 1	1	1				
2	1S8–H3311–00	.BULB, FLASHER (12V-10W)	1	1				AMBER
3	5XK–H3312–00	.LENS, FLASHER	1	1				
4	97702–40616	.SCREW, TAPPING	1	1				
5	5XK–H3320–10	FRONT FLASHER LIGHT ASSY 2	1	1				
6	1S8–H3311–00	.BULB, FLASHER (12V-10W)	1	1				AMBER
7	5XK–H3322–00	.LENS, FLASHER 2	1	1				
8	97702–40616	.SCREW, TAPPING	1	1				
9	97707–40012	SCREW, TAPPING	2	2				

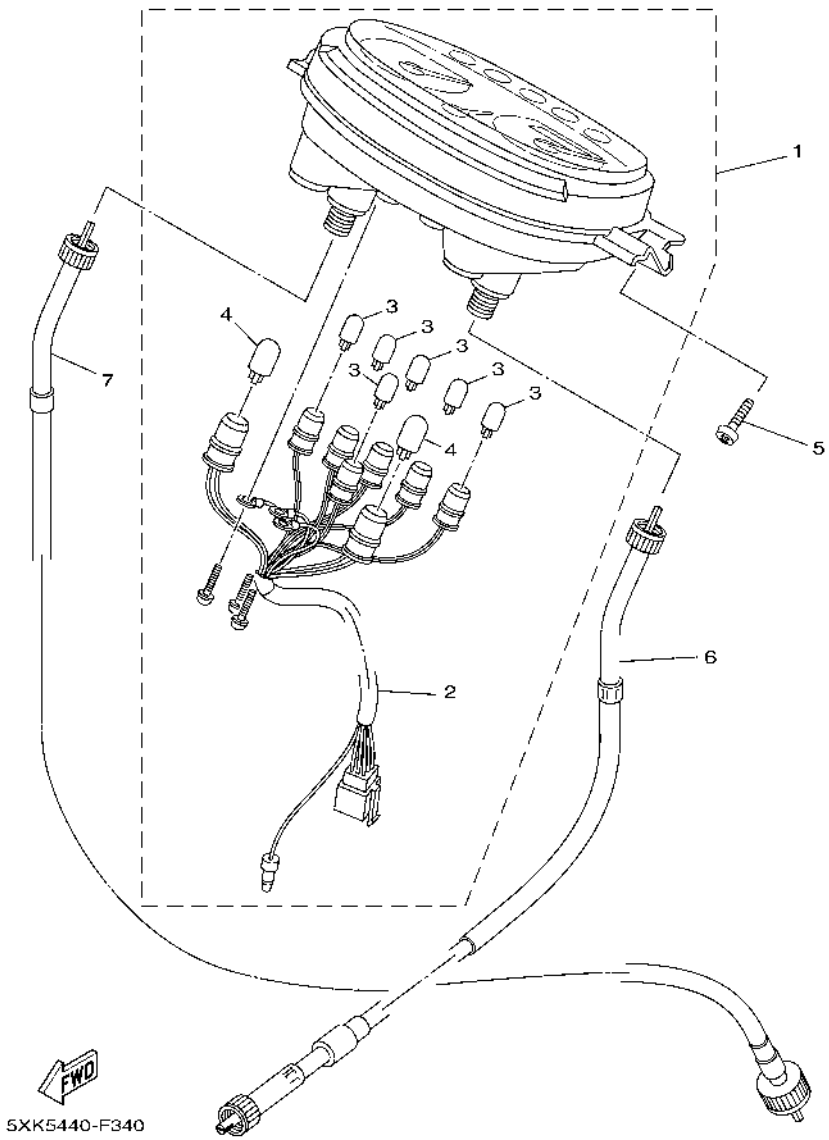

FIG. 34 METER

REF. NO.	PART NO.	DESCRIPTION	5XK9	5XKA				REMARKS
1	5XK–H3510–20	SPEEDOMETER ASSY	1	1				
2	5XK–H3509–00	.SOCKET CORD ASSY	1	1				
3	5BU–H3517–00	.BULB (T6.5 12V-1.7W)	6	6				
4	5BU–H3518–00	.BULB, METER (T10 12V-3.4W)	2	2				
5	97707–50016	SCREW, TRUSS HEAD TAPPING	2	2				
6	5XK–H3550–00	SPEEDOMETER CABLE ASSY	1	1				
7	5XK–H3560–00	TACHOMETER CABLE ASSY	1	1				

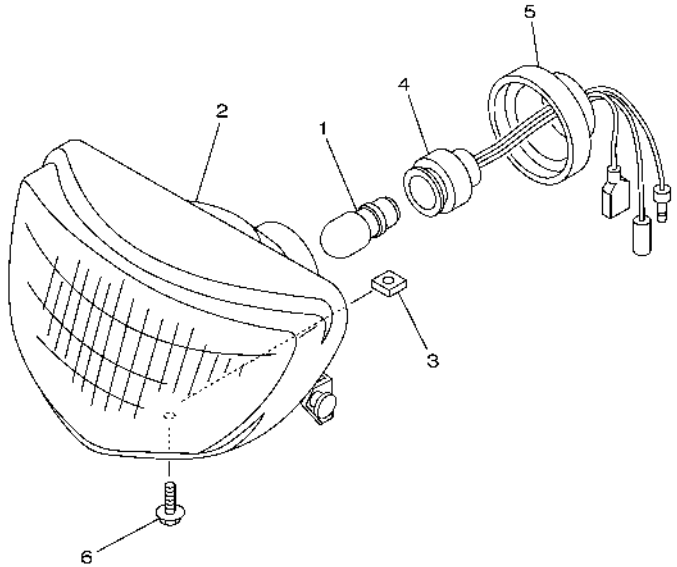

5XK1440-B370

FIG. 35 HEADLIGHT

REF. NO.	PART NO.	DESCRIPTION	5XK9	5XKA				REMARKS
1	5XK–H4314–00	BULB, HEADLIGHT (12V-25/25W)	1	1				
2	5XK–H430A–00	HEADLIGHT UNIT ASSY	1	1				
3	5XK–H4317–00	NUT	1	1				
4	5XK–H4340–00	SOCKET CORD ASSY 1	1	1				
5	5XK–H4397–00	COVER, SOCKET	1	1				
6	95807–06012	BOLT, FLANGE	1	1				

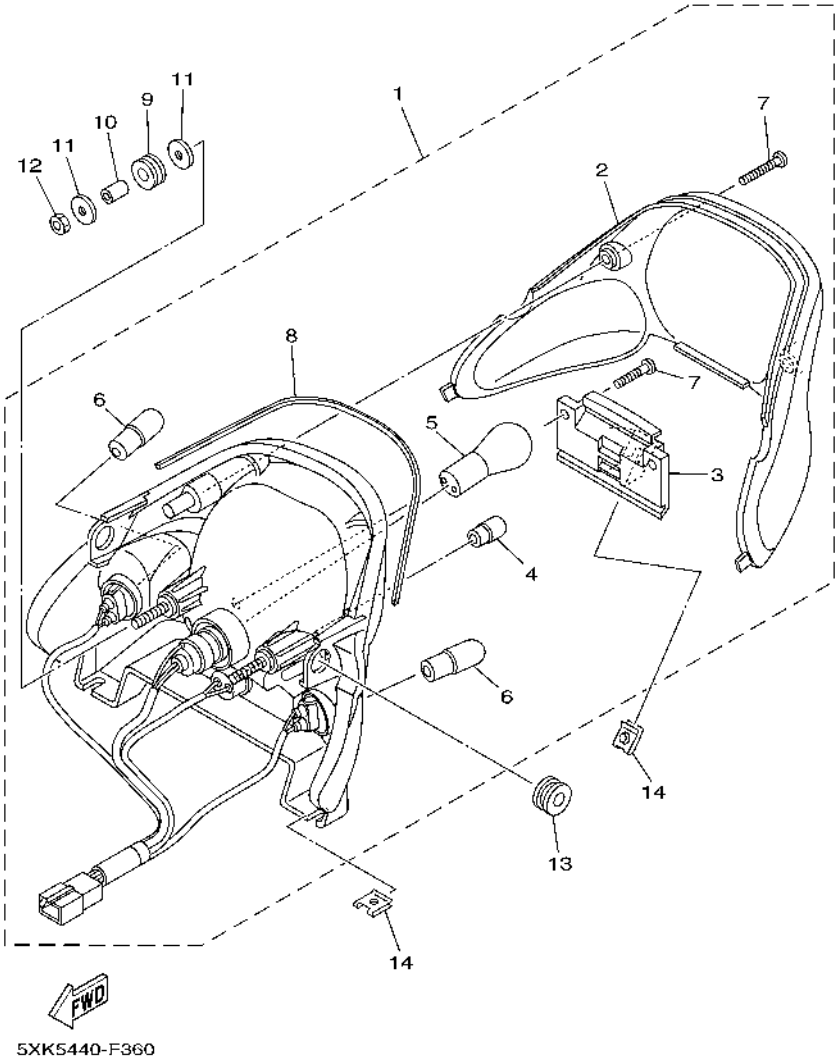

FIG. 36 TAILLIGHT

REF. NO.	PART NO.	DESCRIPTION	5XK9	5XKA				REMARKS
1	5XK–H4710–30	TAILLIGHT UNIT ASSY	1	1				
2	5XK–H4721–20	.LENS, TAILLIGHT	1	1				
3	5XK–H4728–00	.SHADE 1	1	1				
4	5XK–H4744–00	.BULB (12V-5W T10)	1	1				
5	5XK–H4714–10	.BULB (12V-21/5W)	1	1				
6	1S8–H3311–00	.BULB, FLASHER (12V-10W)	2	2				AMBER
7	5XK–H4726–00	.SCREW	4	4				
8	5XK–H4704–00	.GASKET, TAILLIGHT	1	1				
9	90480–18880	GROMMET	2	2				
10	90387–066M1	COLLAR	2	2				
11	90201–06071	WASHER, PLATE	4	4				
12	95307–06600	NUT	2	2				
13	90480–13813	GROMMET	2	2				
14	90183–05042	NUT, SPRING	3	3				

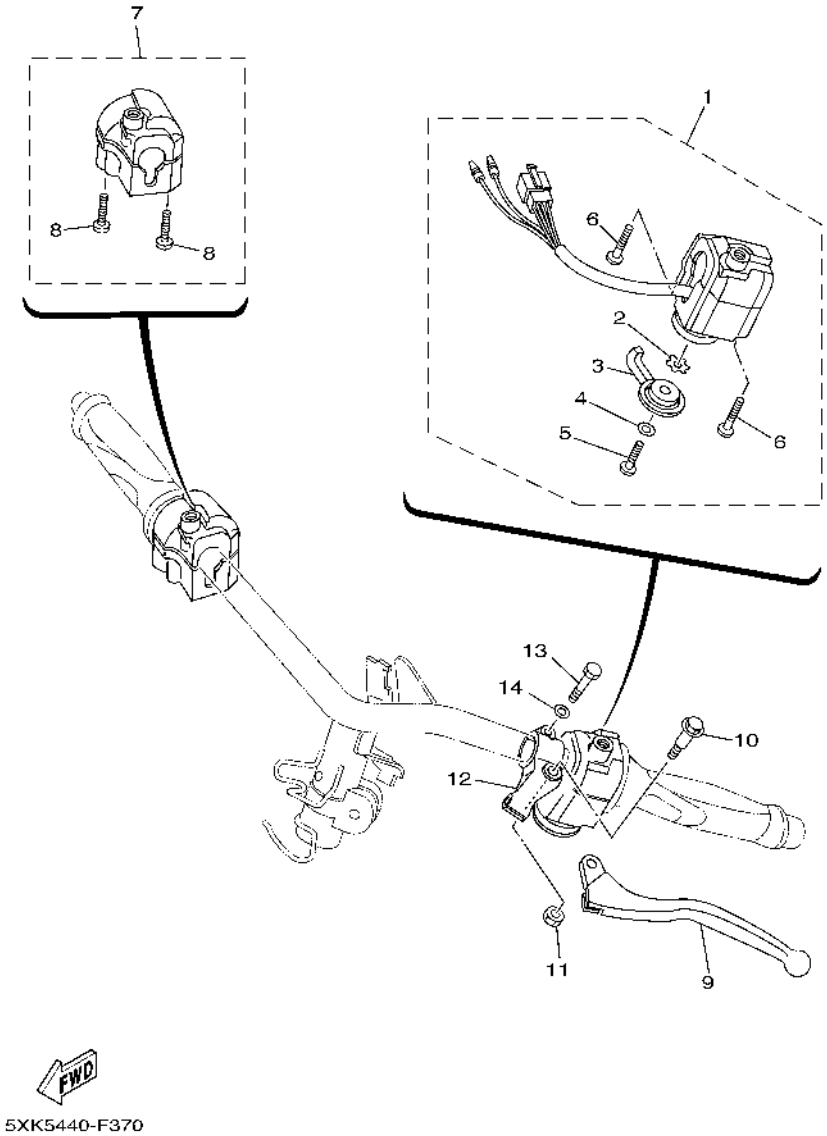

FIG. 37 HANDLE SWITCH & LEVER

REF. NO.	PART NO.	DESCRIPTION	5XK9	5XKA				REMARKS
1	5TF–H3973–00	SWITCH, HANDLE 3	1	1				
2	90209–10131	.WASHER	1	1				
3	4VK–H3941–00	.LEVER, STARTER	1	1				
4	92901–06200	.WASHER, PLAIN	1	1				
5	98506–06008	.SCREW, PAN HEAD	1	1				
6	98506–05035	.SCREW, PAN HEAD	2	2				
7	5XK–F628J–00	CAP, GRIP	1	1				
8	98507–05045	.SCREW, PAN HEAD	2	2				
9	1NV–83912–01	LEVER 1	1	1				
10	90109–06797	BOLT	1	1				
11	95607–06100	NUT, U	1	1				
12	3YR–82911–00	HOLDER, LEVER 1	1	1				
13	97007–06025	BOLT	1	1				
14	92907–06600	WASHER, PLATE	1	1				

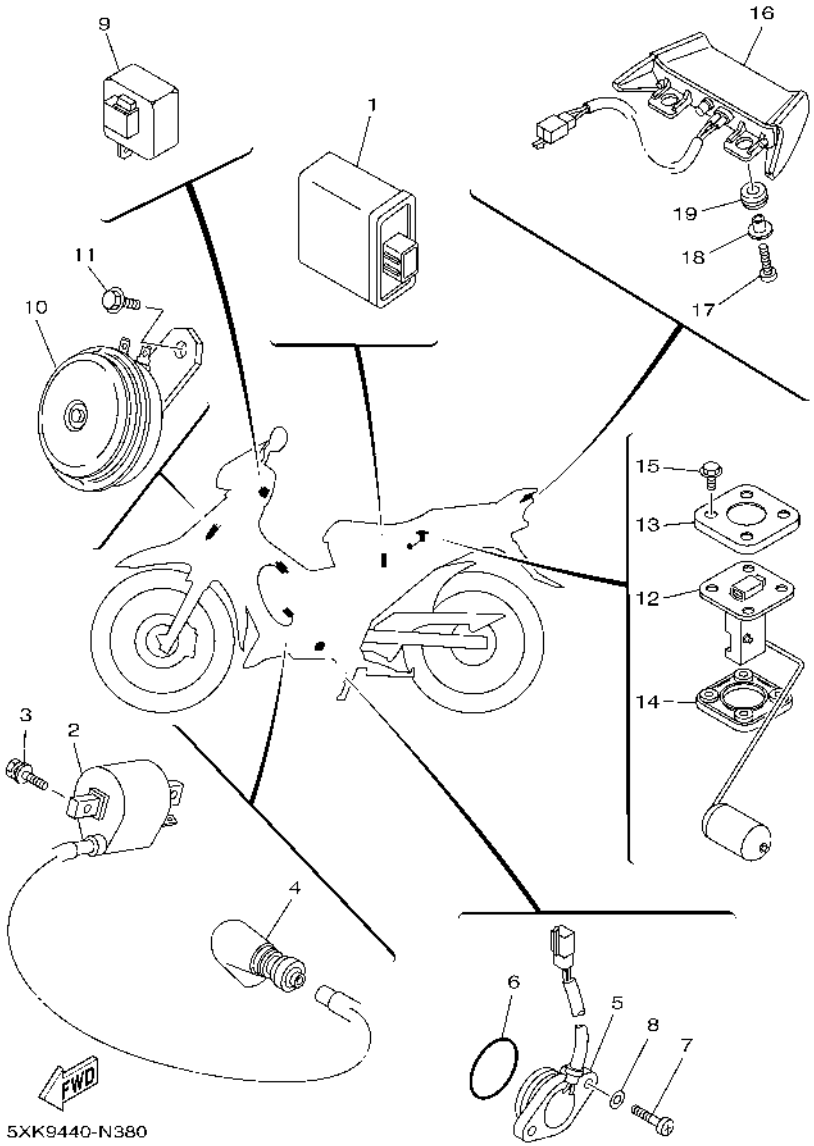

FIG. 38 ELECTRICAL 1

REF. NO.	PART NO.	DESCRIPTION	5XK9	5XKA				REMARKS
1	5BU–85540–01	C.D.I. UNIT ASSY	1	1				
2	5BP–H2310–01	IGNITION COIL ASSY	1	1				
3	90153–06047	SCREW, HEXAGON	2	2				
4	81E–82370–30	PLUG CAP ASSY	1	1				
5	5XK–H2540–00	NEUTRAL SWITCH ASSY	1	1				
6	93210–27194	O-RING	1	1				
7	98507–05016	SCREW, PAN HEAD	2	2				
8	92907–05600	WASHER, PLATE	2	2				
9	5D9–H3350–00	FLASHER RELAY ASSY	1	1				
10	5XK–H3371–10	HORN	1	1				
11	95802–08012	BOLT, FLANGE	1	1				
12	5XK–H5752–10	SENDER UNIT ASSY, FUEL METER	1	1				
13	5BU–H5757–00	RETAINER	1	1				
14	5BU–H5753–01	GASKET, SENDER UNIT	1	1				
15	90119–05071	BOLT, WITH WASHER	4	4				
16	5XK–H3720–00	L.E.D ASS'Y	1	1				
17	98907–06016	SCREW, BIND	2	2				
18	90387–061N0	COLLAR	2	2				
19	90480–13805	GROMMET	2	2				

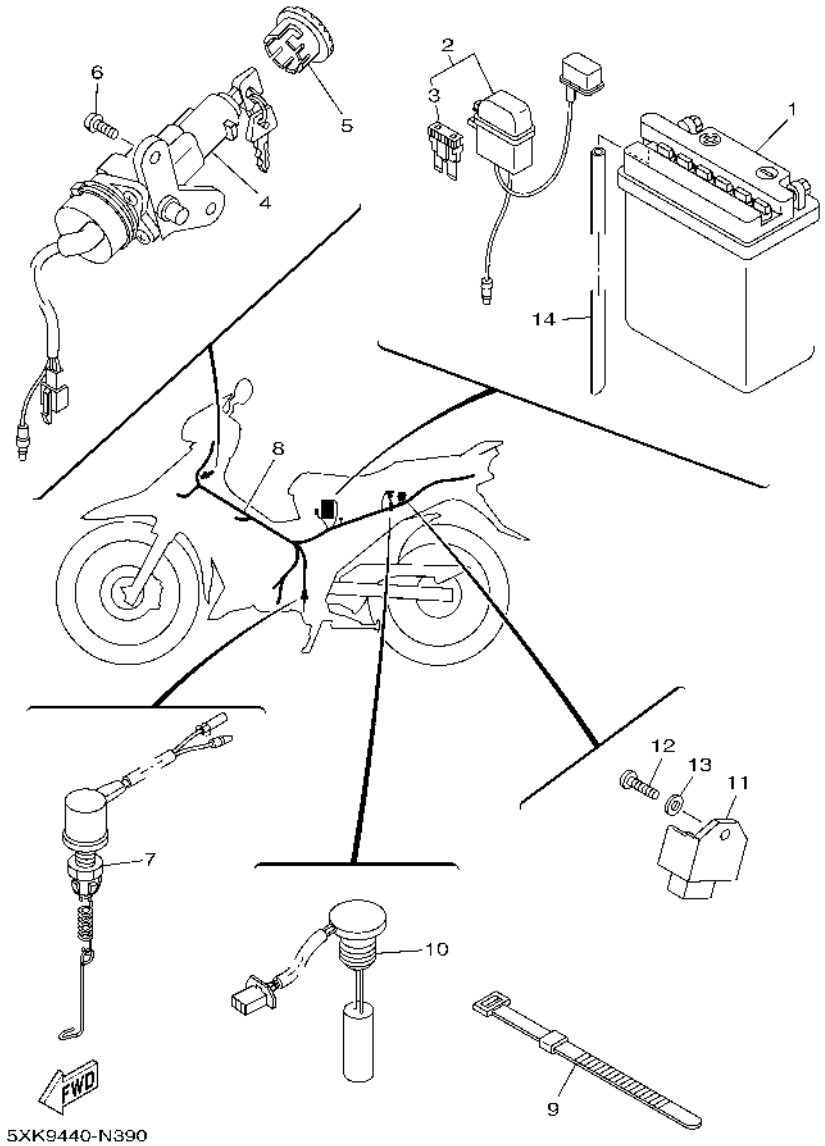

FIG. 39 ELECTRICAL 2

REF. NO.	PART NO.	DESCRIPTION	5XK9	5XKA				REMARKS
1	5XK–H2110–00	BATTERY ASSY	1	1				
2	5BU–H2150–00	FUSE HOLDER ASSY	1	1				
3	5VW–H2151–00	.FUSE (10A)	1	1				
4	5XK–H2501–01	MAIN SWITCH STEERING LOCK	1	1				
5	2JG–H2552–00	CAP, SWITCH	1	1				
6	90149–06309	SCREW	2	2				
7	5XK–H2530–00	STOP SWITCH ASSY	1	1				
8	5XK–H2590–20	WIRE HARNESS ASSY	1	1				
9	90464–50801	CLAMP	4	4				
10	3XC–85720–03	OIL LEVEL GAUGE ASSY	1	1				
11	4UL–H1960–00	RECTIFIER & REGULATOR ASSY	1	1				
12	98507–06016	SCREW, PAN HEAD	1	1				
13	92907–06600	WASHER, PLATE	1	1				
14	90445–083F2	HOSE (L620)	1	1				

PART NO.	REF. NO.
5BU–11454–00	2 – 18
4XC–11530–01	2 – 23
4XC–11536–01	2 – 17
5BU–11603–00	2 – 9
5BU–11604–00	2 – 9
5BU–11605–00	2 – 9
5BU–11631–00–A0	2 – 8
280–11633–00	2 – 11
5BU–11635–00	2 – 8
5BU–11636–00	2 – 8
34X–11651–00	2 – 4
55K–11681–00	2 – 5
5BU–13104–02	3 – 1
5BU–13161–00	3 – 2
4FL–13175–00	3 – 10
10V–13178–01	3 – 7
5BU–13565–00	4 – 8
3BS–13610–00	4 – 1
3BS–13613–00	4 – 2
3BS–13613–10	4 – 6
10V–13616–01	4 – 3
4AC–14103–00	5 – 7
3MB–14104–00	5 – 20
17L–14106–00	5 – 30
21W–14107–20	5 – 21
5BU–14112–20	5 – 18
5BU–14126–00	5 – 16
5BU–14131–00	5 – 11
509–14135–00	5 – 26
5BU–14141–32	5 – 17
193–14142–15	5 – 19
137–14143–20	5 – 22
2N4–14145–00	5 – 4
132–14146–00	5 – 23
5BU–14146–00	5 – 28
214–14147–00	5 – 10
878–14147–00	5 – 25
4AC–14155–00	5 – 31
127–14161–00	5 – 29
1M1–14169–00	5 – 9
3YR–14169–00	5 – 27
5U8–14169–00	5 – 32
3XV–14171–00	5 – 8
1R0–14174–00	5 – 33
304–14184–00	5 – 6
304–14185–00	5 – 3
537–14186–00	5 – 2
12R–14191–00	5 – 5

PART NO.	REF. NO.
10V–14196–00	5 – 24
4AC–14197–00	5 – 12
3NA–14613–01	6 – 9
5BU–1490J–00	5 – 15
3Y1–15363–10	8 – 10
5BU–15641–00	9 – 2
5BU–15660–00	9 – 1
5BU–15666–00	9 – 6
5BU–15671–00	9 – 3
2JK–16111–01	10 – 24
5BU–16321–10	10 – 4
5BU–16331–00	10 – 6
4TT–16356–00	10 – 17
5BU–16383–00	10 – 7
55K–17121–00	11 – 6
10W–17131–01	11 – 5
10W–17151–02	11 – 2
3SB–17161–00	11 – 7
10W–17211–00	11 – 11
10W–17221–00	11 – 15
10W–17231–00	11 – 13
3SB–17241–00	11 – 14
10W–17251–01	11 – 12
5BU–17261–00	11 – 16
5BU–17411–00	11 – 1
5BU–17421–00	11 – 10
4L0–17811–00	11 – 34
4L0–17818–00	11 – 36
17F–17831–00	11 – 31
17F–17841–00	11 – 32
5BU–18101–10	13 – 1
5BU–18535–00	12 – 11
5BU–18540–00	12 – 1
2N3–21771–01	17 – 3
55K–22129–00	18 – 4
18G–23411–00	20 – 20
22F–23411–01	19 – 4
156–23412–00	19 – 1
22F–23412–01	19 – 3
3VP–23416–00	19 – 6
341–23469–00	22 – 19
5BU–24834–00	26 – 10
5NM–2536G–00	24 – 13
5BU–2580W–00	26 – 3
4ML–2582A–50	30 – 5
5BU–2583V–00	30 – 1
2VN–25852–00	30 – 9
2VN–25854–00	30 – 11

PART NO.	REF. NO.
2VN–25855–00	30 – 10
2VN–25866–00	30 – 4
4EW–25894–00	30 – 8
5BU–25895–00	30 – 13
3FV–2589A–00	30 – 14
3SP–25914–51	24 – 10
3JD–25917–00	24 – 12
3SP–25924–51	26 – 9
3LD–25934–01	26 – 8
1UY–25937–51	24 – 11
439–27112–00	29 – 3
2YK–27222–00	30 – 6
5BU–27234–00	30 – 15
4AV–81403–00	32 – 3
81E–82370–30	38 – 4
3YR–82911–00	37 – 12
1NV–83912–01	37 – 9
5BU–85540–01	38 – 1
5BU–85550–01	32 – 1
5BU–85560–01	32 – 2
4KG–85595–01	32 – 4
3XC–85720–03	39 – 10
5BU–E1111–00	1 – 1
5BU–E1161–00	1 – 3
5BU–E1162–00	1 – 14
5XK–E1181–00	1 – 8
5BU–E1191–00	1 – 2
5BU–E1311–00	1 – 9
5BU–E1351–00	1 – 11
5BU–E1400–02	2 – 1
5BU–E1412–02	2 – 2
5BU–E1422–02	2 – 3
5BU–E1464–00	2 – 22
5BU–E3115–00	7 – 14
5BU–E3174–00	8 – 20
5BU–E3176–00	3 – 11
5BU–E3621–00	4 – 7
5BU–E4101–00	5 – 1
5BU–E4411–00	4 – 13
5BU–E4412–00	4 – 14
5BU–E4437–00	4 – 20
5BU–E4451–00	4 – 17
5BU–E4453–00	4 – 19
5BU–E4476–00	4 – 18
5XK–E4710–00	6 – 1
5BU–E4718–00	6 – 2
5BU–E4728–00	6 – 7
5BU–E4738–00	6 – 8

PART NO.	REF. NO.
5XK–E4758–00	6 – 5
5BU–E5111–00	7 – 1
5BU–E5113–00	7 – 12
5BU–E5121–00	7 – 2
5BU–E5316–00	7 – 3
5BU–E5379–00	8 – 2
5XK–E5411–00	8 – 1
5XK–E5416–00	8 – 18
5XK–E5421–00	8 – 5
5BU–E5441–00	8 – 16
5BU–E5461–00	8 – 9
5BU–E5484–00	7 – 16
5BU–E5485–00	4 – 21
5BU–E5492–00	7 – 10
5BU–E5620–00	9 – 10
5BU–E6116–00	10 – 13
5BU–E6150–00	10 – 1
5XK–E6324–00	10 – 5
5BU–E6351–00	10 – 9
5BU–E6352–00	10 – 10
4TT–E6371–00	10 – 3
5BU–E6380–10	10 – 23
5BU–E6384–00	10 – 8
5BU–E7456–00	11 – 26
5BU–E7471–00	11 – 28
5BU–E7861–00	11 – 30
5XK–E8110–00	13 – 3
5XK–E8111–00	13 – 4
5XK–E8112–00	13 – 5
5H3–E8113–00	13 – 9
5XK–E8115–00	13 – 6
5BU–E8140–00	12 – 4
5BU–E8144–00	12 – 5
4TT–E8511–00	12 – 7
4TT–E8512–00	12 – 8
4TT–E8513–00	12 – 9
55K–E8531–00	12 – 10
4TT–E8542–00	12 – 3
5XK–F1110–00–33	14 – 1
5XK–F1110–00–WN	14 – 1
5BU–F124E–00	16 – 12
5BU–F1398–00	22 – 20
5XK–F1415–10	14 – 8
5BU–F1511–00–P3	15 – 1
5BU–F1511–00–P7	15 – 1
5BU–F1511–00–P9	15 – 1
5BU–F1541–00	17 – 2
5BU–F1552–00	15 – 6

PART NO.	REF. NO.
5BU–F1611–01	15 – 8
5BU–F1650–00	18 – 15
5BU–F171E–00–P5	16 – 9
5BU–F171E–00–P6	16 – 9
5BU–F1731–00–2X	16 – 1
5BU–F1731–00–P5	16 – 1
5XK–F173E–E0	16 – 17
5XK–F173E–F0	16 – 17
5XK–F173E–G0	16 – 17
5XK–F173F–E0	16 – 18
5XK–F173F–F0	16 – 18
5XK–F173F–G0	16 – 18
5BU–F1741–00–3X	16 – 5
5BU–F1741–00–P6	16 – 5
5BU–F1747–00	16 – 16
5BU–F1751–00	17 – 1
1S8–F175C–00	31 – 38
5BU–F1766–00	17 – 5
5BU–F177G–00	16 – 11
5XK–F1782–10	16 – 19
3XL–F178A–00	18 – 24
5BU–F2110–00–WN	18 – 1
3AY–F2141–01	18 – 8
	25 – 18
5BU–F2143–00	18 – 19
5BU–F2151–00	18 – 5
5BU–F2174–00	25 – 24
5BU–F2184–00	18 – 3
5BU–F2210–04	18 – 25
5BU–F2311–00	18 – 11
5XK–F3100–00	20 – 1
5BU–F3110–01	20 – 8
5LL–F3111–00	20 – 17
5BU–F3122–00–P3	19 – 9
5BU–F3122–00–P7	19 – 9
5BU–F3122–00–P9	19 – 9
5BU–F3126–00	20 – 2
5BU–F3132–00–P3	19 – 10
5BU–F3132–00–P7	19 – 10
5BU–F3132–00–P9	19 – 10
5XK–F3136–00	20 – 5
5BU–F3141–02	20 – 15
5BU–F3144–00	20 – 13
5BU–F3145–00	20 – 3
	20 – 6
2JG–F3147–00	20 – 12
5BU–F3152–00	20 – 10
2M6–F3156–00	20 – 4

PART NO.	REF. NO.
2M6–F3156–00	20 – 7
5BU–F3157–00	20 – 11
509–F3158–L0	20 – 16
5BU–F3170–01	20 – 9
278–F3181–50	20 – 19
5BU–F3317–00	19 – 14
5TF–F331E–00	20 – 21
5BU–F3340–00	20 – 14
5LL–F3346–00	20 – 18
5BU–F3391–00–P3	31 – 39
5BU–F3391–00–P6	31 – 39
5BU–F3391–00–P7	31 – 39
4UV–F3415–00	19 – 8
156–F341E–01	19 – 2
22F–F341E–01	19 – 5
5XK–F4110–00	21 – 1
5BU–F416A–00	21 – 8
5XK–F4198–00	21 – 14
5BU–F4312–00	21 – 6
4TT–F4500–00	21 – 9
5LW–F4610–00	21 – 12
5LW–F4612–00	21 – 13
5XK–F470F–00	22 – 2
5BU–F4726–00	22 – 6
5BU–F4728–00	22 – 3
5XK–F4730–00	22 – 1
2JG–F4741–00	22 – 5
5XK–F4742–00	22 – 17
5XK–F4773–00–P2	22 – 16
5XK–F4773–00–P6	22 – 16
5XK–F4773–00–P7	22 – 16
5BU–F4780–00	22 – 14
2JG–F4796–00	22 – 11
5XK–F4799–01	22 – 10
5XK–F5168–00–0X	23 – 1
5XK–F5168–00–33	23 – 1
3AY–F5181–01	23 – 8
5TF–F5190–00	23 – 11
5XK–F5338–00–0X	25 – 1
5XK–F5338–00–33	25 – 1
5H3–F5364–00	25 – 6
5XK–F5366–00	25 – 8
5BU–F5388–00	25 – 23
5YP–F5412–00	25 – 14
5BU–F5443–10	25 – 12
5XK–F580U–00	24 – 3
5XK–F582U–00	24 – 1
5BU–F582W–00	26 – 1

PART NO.	REF. NO.
5LN–F583T–01	28 – 4
5XK–F5844–00	30 – 24
5HV–F5852–00	28 – 6
5HV–F5854–00	28 – 8
5HV–F585B–00	28 – 7
56A–F5867–00	28 – 15
5XK–F5872–10	28 – 1
5XK–F5873–00	30 – 22
5BU–F5876–00	18 – 20
5BU–F5886–00	19 – 13
5BU–F5887–00	18 – 13
	18 – 22
5BU–F5888–00	30 – 18
3LD–F5924–00	24 – 9
3LD–F5934–01	24 – 8
3JD–F5961–00	24 – 14
5XK–F6143–10–P1	27 – 5
5XK–F6143–10–P2	27 – 5
5XK–F6143–10–P3	27 – 5
5BU–F6145–00	27 – 6
1S8–F6199–00	27 – 12
5BU–F6210–00	27 – 1
5BU–F6240–00	27 – 13
5BU–F6241–00	27 – 14
5BU–F6246–00	27 – 4
5BU–F6260–00	27 – 17
5LW–F6280–10	27 – 15
5XK–F628J–00	37 – 7
5LW–F6290–10	27 – 16
5BU–F6331–00	27 – 20
5LW–F6332–00	28 – 16
5BU–F6335–00	27 – 22
5TF–F6393–00	27 – 18
5BU–F7111–00	29 – 1
5BU–F7211–00	29 – 7
5BU–F7214–00	29 – 2
5BU–F7311–00	29 – 11
5AB–F7413–00	29 – 20
	29 – 27
5XK–F7422–00	29 – 17
5AB–F7425–00	29 – 23
	29 – 30
5XK–F7430–00	29 – 33
5BU–F7433–00	29 – 34
5XK–F7440–00	29 – 36
5BU–F7444–00	29 – 37
5AB–F7451–01	29 – 19
5XK–F7452–00	29 – 16

PART NO.	REF. NO.
5AB–F7461–01	29 – 26
5BU–F7462–00	29 – 24
5XK–F8100–00	15 – 13
5XK–F8311–00–P0	31 – 1
5XK–F8311–00–P2	31 – 1
5XK–F8311–00–P3	31 – 1
5XK–F8312–00–P0	31 – 4
5XK–F8312–00–P2	31 – 4
5XK–F8312–00–P3	31 – 4
5BU–F8321–00	31 – 7
5BU–F8322–00	31 – 8
5BU–F836B–00	31 – 41
5XK–F8381–10	27 – 25
5XK–F8385–00	31 – 11
5XK–F8391–00	31 – 30
5XK–F8392–00	31 – 31
5XK–F8393–E0	31 – 32
5XK–F8393–F0	31 – 32
5XK–F8393–G0	31 – 32
5XK–F8394–E0	31 – 33
5XK–F8394–F0	31 – 33
5XK–F8394–G0	31 – 33
5XK–F8395–00	31 – 15
5XK–F8398–00	31 – 34
5XK–F8399–00	31 – 35
5XK–F839H–E0	31 – 36
5XK–F839H–F0	31 – 36
5XK–F839H–G0	31 – 36
5XK–F841J–E0	31 – 37
5XK–F841J–F0	31 – 37
5XK–F841J–G0	31 – 37
5BU–F842M–00	31 – 19
5BU–F842N–00	31 – 22
5BU–F843J–00	31 – 25
4UL–H1960–00	39 – 11
5XK–H2110–00	39 – 1
5BU–H2150–00	39 – 2
5VW–H2151–00	39 – 3
5BP–H2310–01	38 – 2
5XK–H2501–01	39 – 4
5XK–H2530–00	39 – 7
5XK–H2540–00	38 – 5
2JG–H2552–00	39 – 5
5XK–H2590–20	39 – 8
5XK–H3310–10	33 – 1
1S8–H3311–00	33 – 2
	33 – 6
	36 – 6

PART NO.	REF. NO.
5XK–H3312–00	33 – 3
5XK–H3320–10	33 – 5
5XK–H3322–00	33 – 7
5D9–H3350–00	38 – 9
5XK–H336T–00	22 – 21
5XK–H3371–10	38 – 10
5XK–H3509–00	34 – 2
5XK–H3510–20	34 – 1
5BU–H3517–00	34 – 3
5BU–H3518–00	34 – 4
5XK–H3550–00	34 – 6
5XK–H3560–00	34 – 7
5XK–H3720–00	38 – 16
5TN–H3922–00	28 – 10
4VK–H3941–00	37 – 3
5TF–H3973–00	37 – 1
5LW–H3980–00	28 – 13
5BU–H4164–00	27 – 7
5XK–H430A–00	35 – 2
5XK–H4314–00	35 – 1
5XK–H4317–00	35 – 3
5XK–H4340–00	35 – 4
5XK–H4397–00	35 – 5
5XK–H4704–00	36 – 8
5XK–H4710–30	36 – 1
5XK–H4714–10	36 – 5
5XK–H4721–20	36 – 2
5XK–H4726–00	36 – 7
5XK–H4728–00	36 – 3
5XK–H4744–00	36 – 4
3C1–H5130–00	15 – 11
5XK–H5752–10	38 – 12
5BU–H5753–01	38 – 14
5BU–H5757–00	38 – 13
5BU–W0042–50	30 – 2
5HV–W0042–50	28 – 5
5XK–W0045–00	24 – 6
5BU–W0046–00	26 – 6
3LC–W0047–50	26 – 5
1UY–W0048–50	26 – 7
5BU–W0057–50	26 – 4
3LC–WF047–50	24 – 5
1UY–WF048–50	24 – 7
5BU–WF057–00	24 – 4
90101–06288	10 – 12
90101–12570	18 – 26
90105–08099	14 – 5
90105–10036	27 – 2

PART NO.	REF. NO.
90105–10051	14 – 2
90105–10638	24 – 15
90105–12660	18 – 27
90109–063F8	12 – 6
90109–06577	28 – 11
90109–065E0	22 – 8
90109–06797	37 – 10
90109–08034	29 – 12
90109–08718	24 – 2
90109–08864	25 – 13
90116–08318	7 – 6
90116–08388	7 – 5
90116–08393	1 – 5
90119–05071	38 – 15
90119–06044	15 – 9
	18 – 6
90119–06117	18 – 12
	18 – 18
90123–08046	27 – 23
90149–04318	3 – 4
90149–06011	21 – 10
90149–06309	39 – 6
90149–08268	26 – 2
90150–05806	27 – 27
90153–06047	38 – 3
90157–06096	8 – 3
90159–06033	4 – 25
	16 – 13
	17 – 4
90159–06056	30 – 17
90159–06067	16 – 2
	16 – 6
	16 – 10
90159–06078	15 – 7
90159–06165	31 – 12
	31 – 16
	31 – 20
	31 – 23
	31 – 26
90170–08401	27 – 24
90170–10405	2 – 26
90170–12368	32 – 9
90176–08061	1 – 6
90179–05802	27 – 26
90179–08299	1 – 13
90179–08639	25 – 15
90179–12659	10 – 16
	10 – 28

PART NO.	REF. NO.
90179–25802	19 – 7
90183–05042	16 – 3
	16 – 7
	27 – 10
	31 – 3
	31 – 6
	31 – 13
	31 – 17
	31 – 29
	36 – 14
90183–06023	16 – 14
90185–10091	23 – 9
90185–10154	27 – 3
90185–12046	18 – 29
	25 – 20
90201–06071	36 – 11
90201–064K6	21 – 5
90201–06674	11 – 37
90201–08083	30 – 20
90201–083A8	6 – 14
90201–087H6	11 – 33
90201–08804	14 – 6
90201–10118	28 – 3
	30 – 25
90201–10140	26 – 12
90201–101J1	13 – 12
	14 – 4
	23 – 10
90201–120E8	10 – 27
90201–120T5	25 – 19
90201–12163	10 – 19
90201–12593	32 – 8
90201–12688	18 – 10
	18 – 28
90201–14411	29 – 8
90201–15700	11 – 20
90201–172U8	10 – 2
	10 – 14
90201–17713	9 – 9
90201–20266	11 – 3
90201–203F5	9 – 7
90201–22555	11 – 19
90202–05187	6 – 3
90202–05193	21 – 11
90208–12015	10 – 15
90209–10131	37 – 2
90209–18135	11 – 17
90209–22292	2 – 6

PART NO.	REF. NO.
90215–10284	2 – 25
90240–08084	29 – 31
90240–08124	30 – 19
90252–23800	29 – 32
90267–32192	18 – 16
90280–03017	2 – 16
90282–05047	2 – 24
	10 – 29
90387–061N0	38 – 18
90387–06681	18 – 7
	19 – 12
90387–066M1	36 – 10
90387–068J7	15 – 3
90387–07674	21 – 4
90387–10277	23 – 7
90387–123A9	25 – 2
90387–123N2	25 – 22
90387–12807	25 – 21
90387–128A5	25 – 10
90387–208J9	10 – 26
90401–10159	28 – 2
	30 – 23
90430–04229	3 – 5
90430–06166	8 – 7
90430–08119	8 – 15
90445–083F2	39 – 14
90445–08808	7 – 15
90445–21848	29 – 15
90445–228B8	29 – 6
90450–44046	4 – 9
90460–49058	4 – 12
90464–23139	17 – 8
90464–50801	27 – 21
	39 – 9
90465–08028	4 – 11
90467–08003	17 – 6
	17 – 7
90467–10008	21 – 7
90467–12085	30 – 12
90468–02033	3 – 3
	3 – 6
90468–08086	27 – 19
90468–26046	9 – 4
90480–01868	15 – 10
90480–09481	8 – 4
90480–10334	16 – 15
90480–12314	15 – 2
90480–13805	38 – 19

PART NO.	REF. NO.
90480–13809	31 – 28
90480–13813	36 – 13
90480–18476	21 – 3
90480–18880	36 – 9
90501–06022	12 – 2
90501–254L6	10 – 11
90506–20369	29 – 10
90506–20514	29 – 14
90506–35474	29 – 5
90508–14709	10 – 22
90508–20023	29 – 21
90508–20631	29 – 28
90508–26700	9 – 5
90560–10292	23 – 2
91317–06012	29 – 22
	29 – 29
91317–08035	22 – 18
91401–16012	30 – 21
91401–20012	13 – 8
92017–08020	29 – 25
92901–06200	37 – 4
92907–03100	4 – 5
92907–03200	18 – 17
92907–04100	5 – 14
92907–05600	38 – 8
92907–06200	13 – 7
92907–06600	4 – 16
	4 – 24
	11 – 39
	15 – 5
	31 – 10
	37 – 14
	39 – 13
92907–08200	6 – 12
92907–08600	25 – 26
93101–10001	3 – 14
93101–12173	13 – 13
93102–12224	10 – 20
93102–17004	9 – 12
93102–20143	11 – 24
93102–25446	2 – 19
93103–25098	2 – 14
93103–32099	2 – 15
93106–20816	23 – 3
93106–20817	25 – 7
93106–30817	25 – 9
93210–12327	11 – 35
93210–15620	30 – 3

PART NO.	REF. NO.
93210–18023	10 – 25
93210–18397	3 – 12
93210–19123	8 – 11
93210–27194	38 – 6
93210–41041	25 – 5
93306–001X4	10 – 18
93306–004XN	25 – 11
93306–004XP	2 – 20
93306–004YD	25 – 11
93306–205XK	2 – 13
93306–252X0	11 – 9
	11 – 22
93306–252Y9	2 – 21
93306–30003	23 – 4
93306–300X8	23 – 4
93306–300Y9	23 – 4
93306–301XC	25 – 3
93306–301YM	25 – 3
93306–301YW	25 – 4
93306–303X9	11 – 8
93306–304YJ	11 – 23
93310–216X9	2 – 10
93310–422X4	2 – 7
93315–108Y7	10 – 21
93317–218Y4	18 – 2
93410–20038	9 – 8
	11 – 4
93410–22039	11 – 18
93430–08007	3 – 9
93430–10015	29 – 9
93430–12008	29 – 4
93450–17044	2 – 12
93603–22028	3 – 8
93608–43238	13 – 2
93822–15070	11 – 25
93900–00817	23 – 6
	25 – 17
94107–17817	23 – 5
94108–17815	25 – 16
94508–30120	25 – 27
94608–30001	25 – 28
94702–00811	1 – 7
95027–06014	1 – 4
95027–06016	19 – 11
95027–06025	20 – 22
95301–08700	30 – 7
95307–06600	36 – 12
95307–08600	25 – 25

PART NO.	REF. NO.
95307–08700	29 – 13
95607–06100	22 – 9
	22 – 13
	37 – 11
9560M–06100	28 – 12
95614–12100	18 – 9
95617–08100	14 – 7
95617–08620	1 – 10
95617–10100	14 – 3
95707–05500	15 – 12
95707–06500	22 – 4
	22 – 7
95707–08500	6 – 10
	6 – 13
95802–08012	38 – 11
95807–06012	18 – 14
	18 – 21
	18 – 23
	22 – 15
	35 – 6
95807–06014	14 – 9
95807–06016	8 – 6
95807–06025	4 – 10
95807–08020	29 – 35
	29 – 38
95807–08080	8 – 14
95817–10040	13 – 11
95827–06020	30 – 16
95827–10020	29 – 18
95827–10030	26 – 11
97007–06012	11 – 38
	31 – 9
97007–06020	21 – 2
97007–06025	37 – 13
97007–08020	6 – 11
97027–06010	11 – 27
97027–06020	13 – 10
	15 – 4
97027–08030	9 – 11
9760L–04212	28 – 14
97702–40616	33 – 4
	33 – 8
97707–40012	33 – 9
97707–50012	31 – 2
	31 – 5
	31 – 24
	31 – 27
97707–50014	16 – 4

PART NO.	REF. NO.
97707–50014	16 – 8
	31 – 14
	31 – 18
	31 – 21
	31 – 40
97707–50016	27 – 8
	27 – 9
	27 – 11
	34 – 5
97707–50512	4 – 22
98506–05035	37 – 6
98506–06008	37 – 5
98507–03008	4 – 4
98507–04006	22 – 22
98507–04016	5 – 13
98507–05012	11 – 29
98507–05014	3 – 13
98507–05016	38 – 7
98507–05045	37 – 8
98507–06012	7 – 11
98507–06014	8 – 17
	32 – 7
98507–06016	4 – 23
	22 – 12
	39 – 12
98507–06020	8 – 19
98507–06025	4 – 15
98507–06030	8 – 12
98507–06035	7 – 7
98507–06040	8 – 13
98507–06060	7 – 8
98507–06070	7 – 9
98507–08010	7 – 13
98517–04010	32 – 6
98517–06020	32 – 5
9870M–04012	28 – 9
98907–06008	6 – 6
98907–06016	38 – 17
98980–06008	6 – 4
99009–15400	11 – 21
99530–10114	1 – 12
	7 – 4
	8 – 8

PART NO.	REF. NO.

PART NO.	REF. NO.